TOYOTA GENUINE

PARTS, SERVICE & ACCESSORIES

PRADO 5 DOOR

PRODUCTION DATE: AUGUST 2017 ONWARDS

FITTING INSTRUCTIONS FOR:
ACCESSORY PART NUMBER: PZQ6460220 & PZQ6460225
TOWBAR

PLACE THESE INSTRUCTIONS IN VEHICLE GLOVEBOX AFTER INSTALLATION IS COMPLETE

CAUTION	CARE INSTRUCTIONS	INSTALLATION TIME
This kit weighs in excess of 15kg. Seek help to lift if required.	Wash with regular car wash products. Regularly check bolt torque settings.	Approximately 30 minutes (guide only).

CAUTION

Ensure correct tools & appropriate PPE are used whilst installing this accessory

KIT CONTENTS

1	Fitting Instructions	x1
2	Tow Bar Centre	x1
3	Tongue	x1
4	LH Side Arm	x1
5	RH Side Arm	x1
6	Exhaust Bracket	x8
7	Hitchbox Insert	x1
8	Collar Cover	x1
9	Fasteners	REFER PARTS LIST
10	Rear Cover Kit	

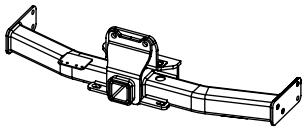

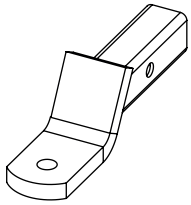

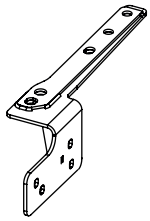

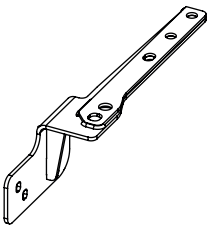

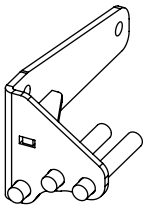

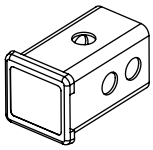

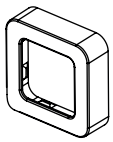

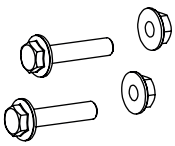

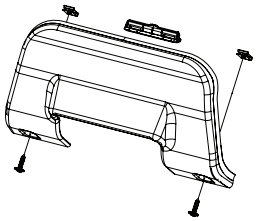

⚠ CHECK THAT THE CONTENTS OF THE TOW BAR KIT ARE COMPLETE & UNDAMAGED PRIOR TO FITMENT.

⚠ IF ANY CONTENTS OF THE TOW BAR KIT ARE INPOMPLETE OR DAMAGED THEY MUST BE REPLACED USING SPECIFIED ACESSORY COMPONENTS.

TOOLS REQUIRED

1	Protective tape
2	Metric sockets & spanners
3	Torque wrench
4	Phillips head screwdriver
5	Sharp knife
6	Drill
7	Jigsaw
8	Grinder

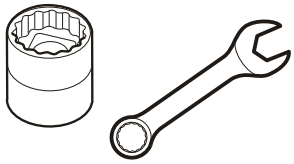

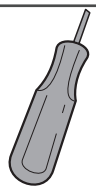

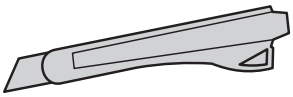

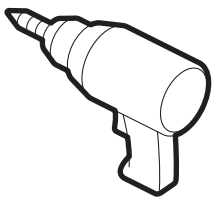

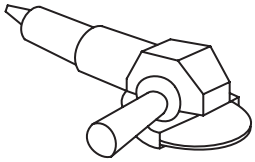

⚠ CAUTION

This tow bar is to be used for trailer towing only.

PARTS LIST Check contents of kit before commencing & report any discrepancies.

BOLT TORQUES

(Hold nuts & tighten bolts):

Torque all chassis M12 bolts to 91Nm. (marked with V)

Torque remaining M12 bolts to 150Nm.

Torque all M8 bolts to 25Nm.

Torque garnish screws to 5Nm

Torque tolerance +/-13%

TOWBAR CONTENETS

ITEM NO.	DESCRIPTION	QTY.
1	Towbar Centre Section Assembly	1
2	Tongue Assembly	1
3	LH Side Arm Assembly	1
4	RH Side Arm Assembly	1
5	Pull Pin	1
6	R-Clip	1
7	Exhaust Bracket	1
8	Plastic Cap	4
9	Hex Bolt M10 x 35 x 1.5	1
10	Hex Nut M10 x 1.5	1
11	Spacer Plate	4
12	Flat Washer M8 x 32 x 5 (thick)	6
13	Hitchbox Collar Cover	1
14	10mm Spacer Block	1
15	Flat Washer M8 x 22 x 3	1
16	Rust Inhibitor Sachet (Not Shown)	1
17	Flange Bolt M12 x 45 x 1.25	6
18	Flange Bolt M12 x 35 x 1.25	10
19	Flange Nut M12 x 1.25	4
20	Flange Bolt M8 x 35 x 1.25	7
21	Flange Bolt M8 x 20 x 1.25	2
22	Hitchbox Insert with Sticker	1
23	Spare Wheel Warning Label (Not Shown)	1

GARNISH CONTENETS

ITEM NO.	DESCRIPTION	QTY.
24	Rear Cover	1
25	Cover Clip	1
26	Self Tapping Screw 19mm	2
27	Clip Nut	2

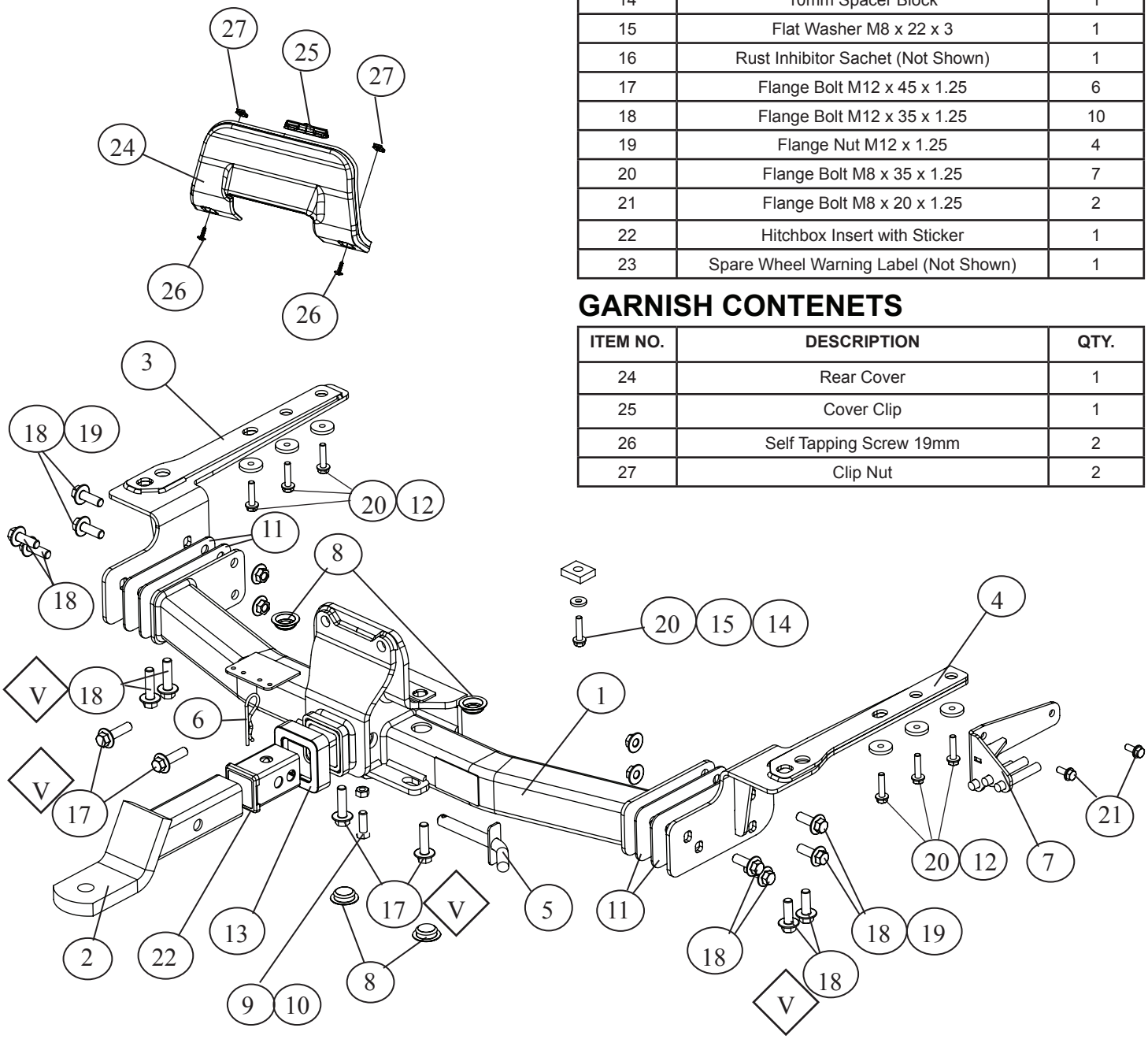

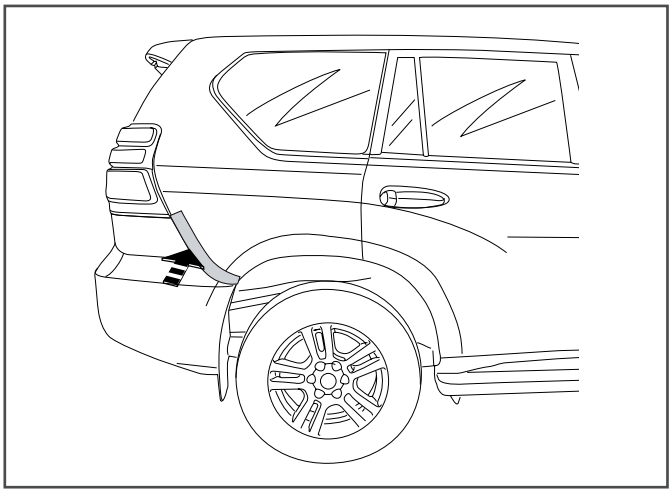

STEP 1

- Check contents of towbar & garnish kit before commencing fitment.
- Protect edges of rear bumper prior to removal

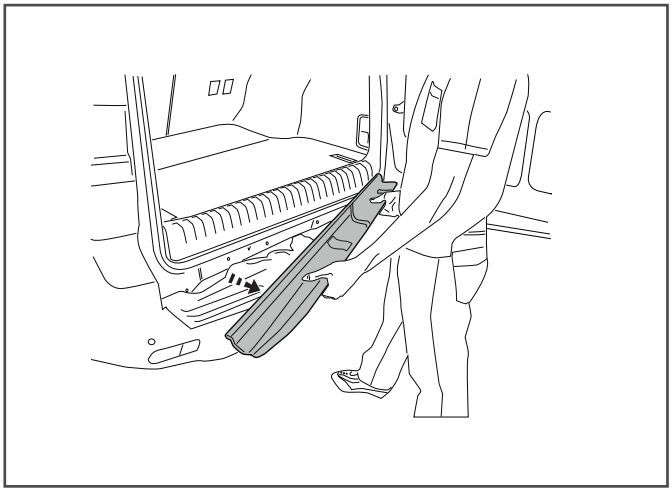

STEP 2

- Open rear door and remove lower trim.

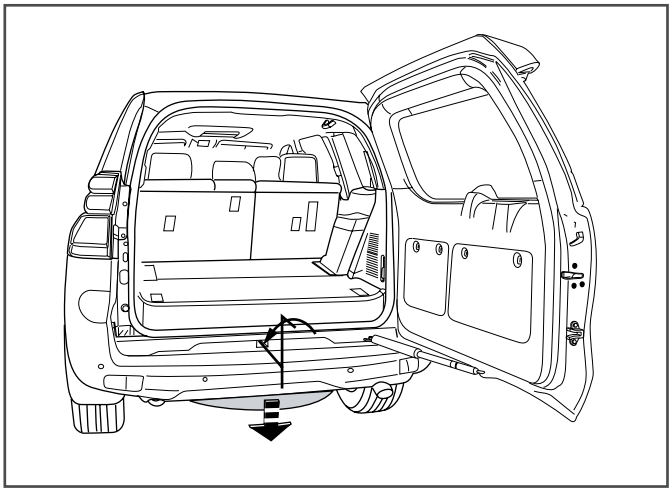

STEP 3

- For under body mounted spare wheel variant, lower & remove the spare wheel.

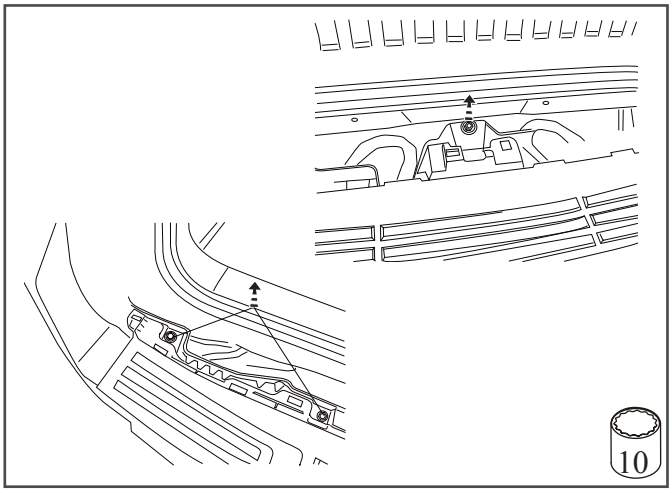

STEP 4

- Remove rear bumper fasteners from top surface.

STEP 5

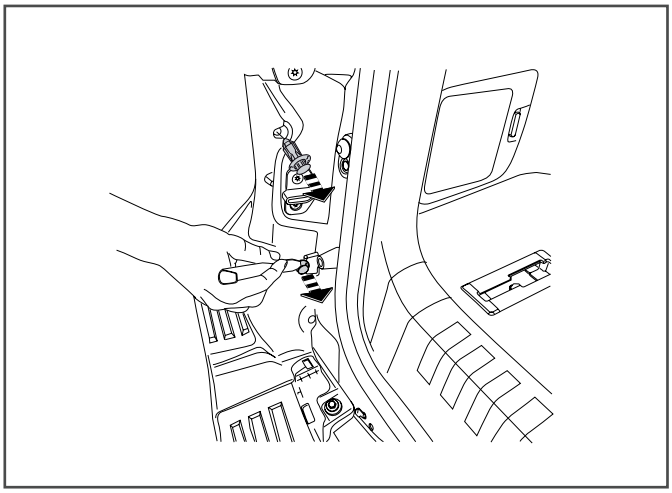

- Remove rear bumper clips from top surface.

STEP 6

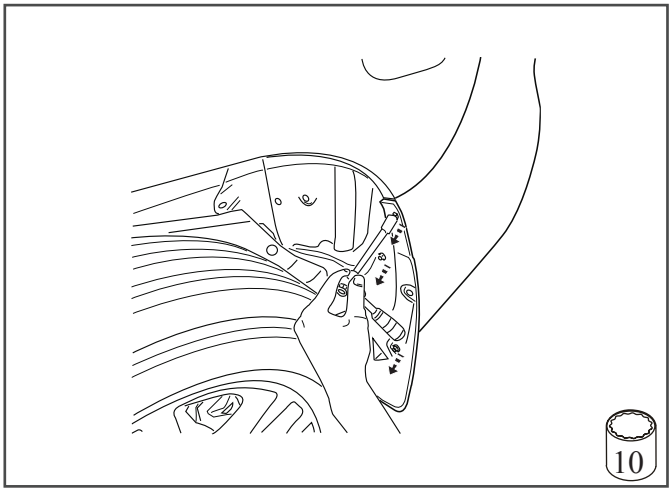

- Remove fasteners from rear arch.

STEP 7

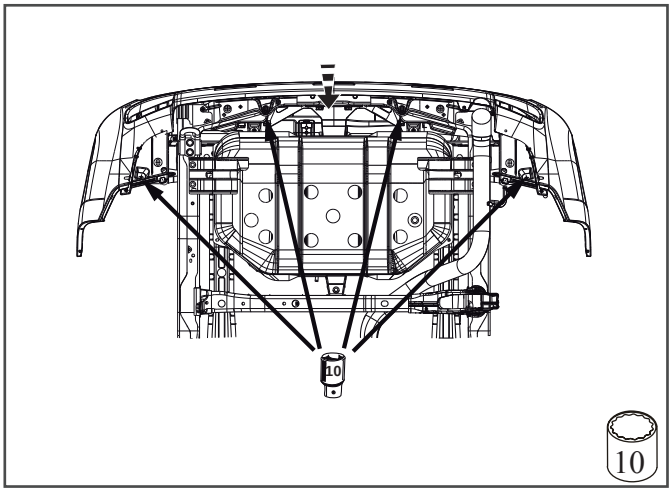

- Remove under body fasteners.

NOTE: Outboard fasteners only present on under body spare wheel variants.

STEP 8

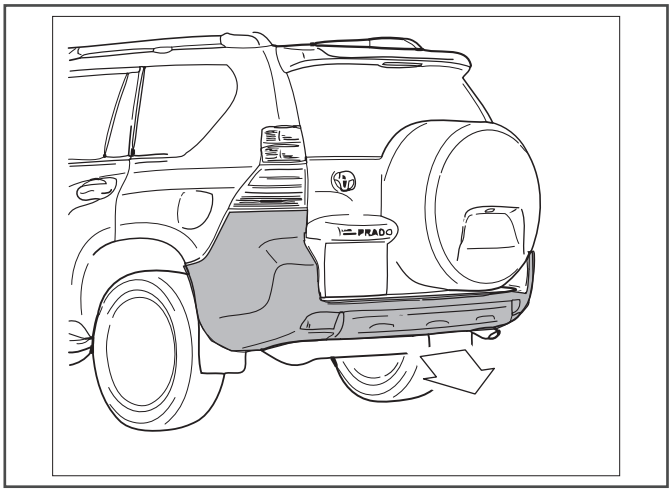

- Check contents of kit before commencing fitment.
- Remove rear bumper

NOTE: Refer to the Workshop Manual to remove the rear bumper.

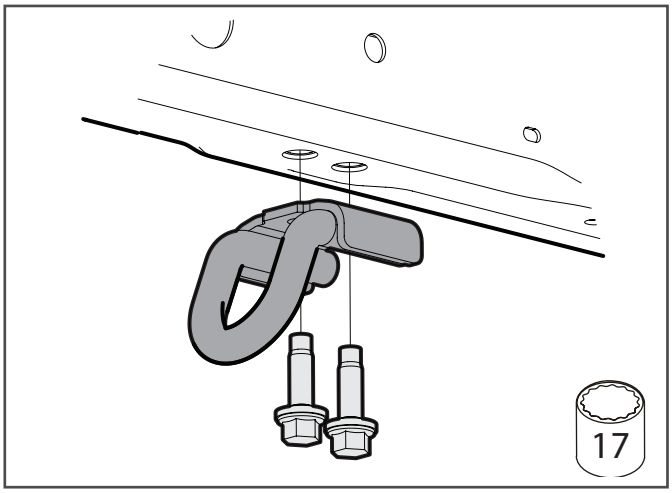

STEP 9

- Remove the transport hook from the LHS chassis rail by removing 2x M12 bolts.
- Discard bolts & retain hook.

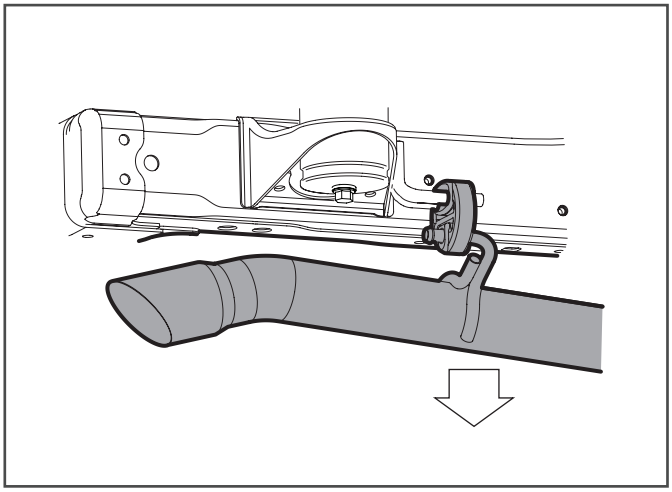

STEP 10

- Lower the exhaust by unhooking the rubber hanger from the chassis rods.

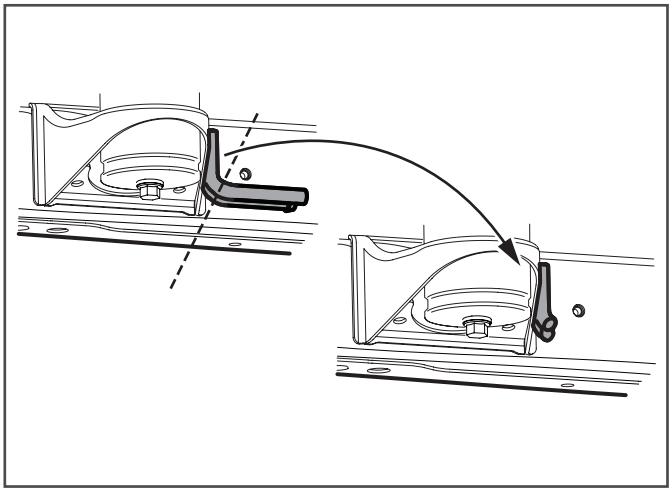

STEP 11

- Using a grinder (with metal cutting disc) or similar, cut off the rear most exhaust hanger rods in line with the vehicle sheetmetal, as shown.
- Use paint or rust inhibitor (Item 16) to cover cut edge.

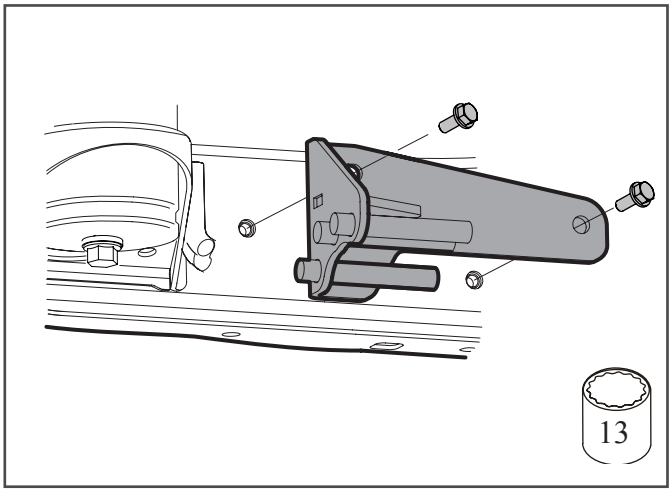

STEP 12

- Install the exhaust hanger bracket (Item 7) to the RH chassis rail using 2x M8 x 25mm flange bolts (21)
- Torque bolts per details on page 3.

NOTE: Exhaust bracket bolts are 25mm long.

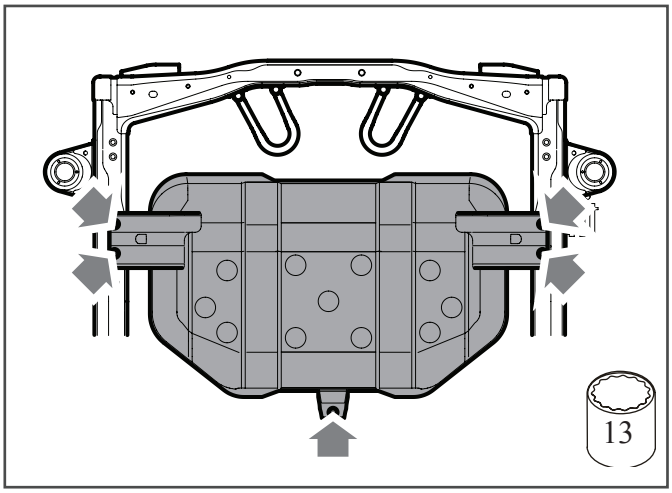

STEP 13

- Remove fuel tank protector by removing 5x M8 bolts.
- Discard bolts.

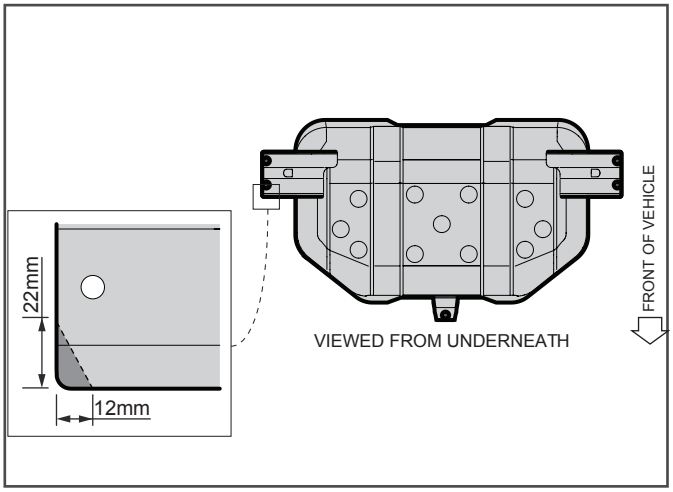

STEP 14

- For vehicles fitted with OE air suspension (eg. Kakadu), trim the forward most corner of the left hand strap as shown. Do not exceed dimensions shown.
- Apply paint or rust inhibitor (Item 16) to cut edge.

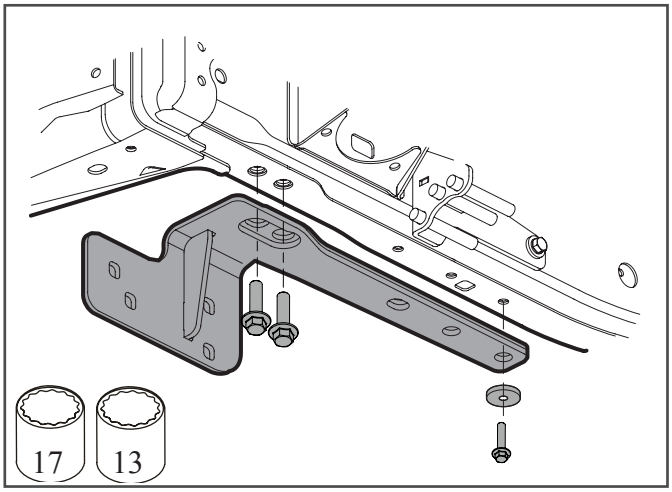

STEP 15

- Separate LH & RH sidearms (Items 3 & 4) that are supplied bolted together. Retain fasteners.
- Loosely assemble the RH Sidearm (Item 4) to the RH chassis rail with 2x M12 x 35mm flange bolts (Item 18) in the rearward most positions.
- Loosely install 1x M8 x 35mm flange bolt (Item 20) & 1x M8 x 32 x 5 flat washer (Item 12) in forward most location.

NOTE: RH sidearm to chassis M12 & M8 bolts are 35mm long.

IMPORTANT: Ensure the RH sidearm is positioned flat against the underside of the chassis rail - not riding up on the chassis welds.

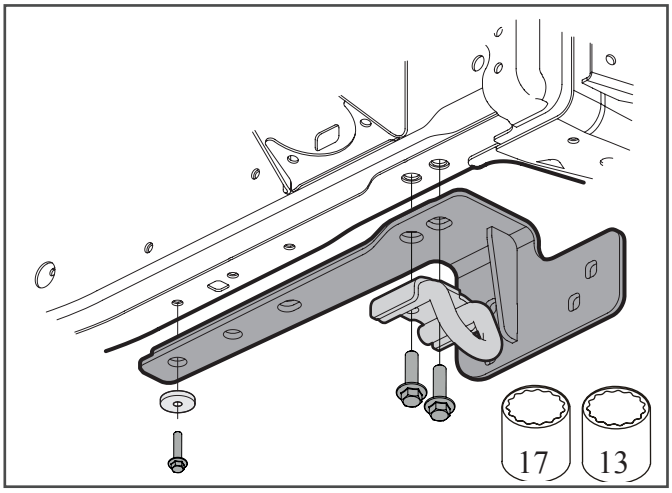

STEP 16

- Loosely assemble the LH Sidearm (Item 3) to the LH chassis rail with 1x M8 x 35mm flange bolt (Item 20) & 1x M8 x 32 x 5 flat washer (Item 12) in forward most location.
- Re-install the transport hook, removed in step 2, to the underside of the LH side arm using 2x M12 x 45mm flange bolts (Item 17) in the rearward most positions.

NOTE: LH sidearm to chassis M12 bolts are 45mm long and M8 bolts are 35mm long.

IMPORTANT: Ensure the LH sidearm is positioned flat against the underside of the chassis rail - not riding up on the chassis welds.

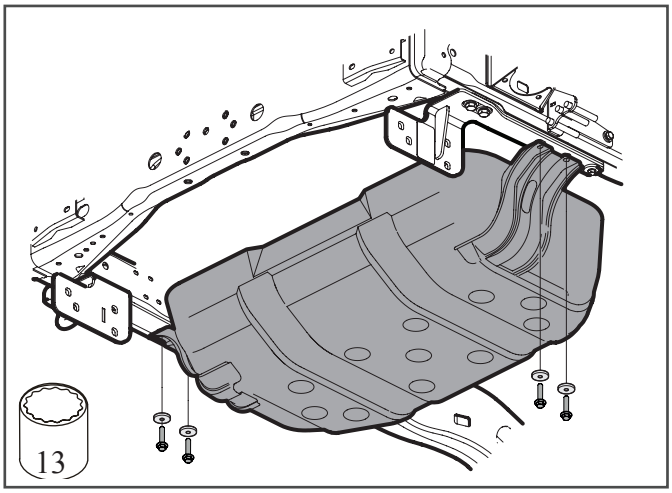

STEP 17

- Re-install the fuel tank protector, removed in step 6, on the underside of the Sidearms. Loosely secure to the LH chassis rail with 2x M8 x 35mm flange bolts (Item 20) and 2x M8 x 32 x 5 flat washers (Item 12).
- Repeat for RH side.

NOTE: Fuel tank protector/Sidearm to chassis M8 bolts are 35mm long.

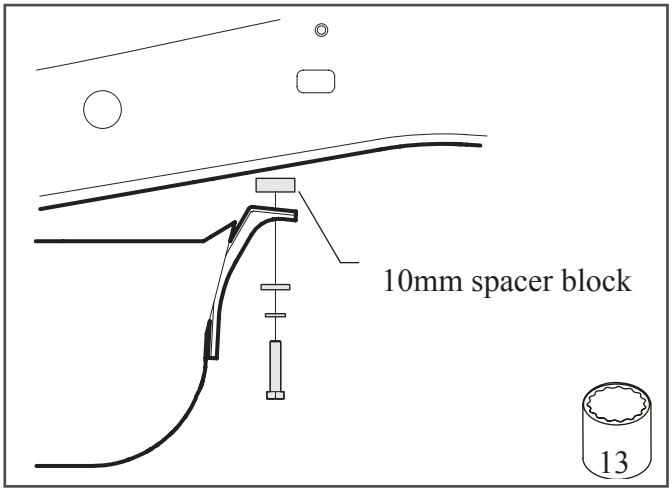

STEP 18

- Loosely install the forward mount of the fuel tank protector with 1x M8 x 35mm flange bolt (Item 20), 1x M8 x 22 x 3 flat washer (Item 15) & 1x 10mm spacer block (Item 14) as shown.

NOTE: Fuel tank protector forward M8 bolt is 35mm long.

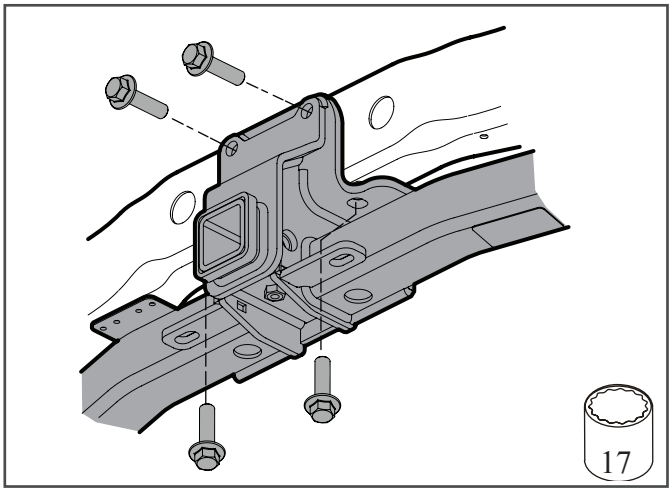

STEP 19

- Loosely secure the centre section (Item 1) to the rear crossmember using 4x M12 x 45mm flange bolts (Item 17).

NOTE: Centre section to rear cross member M12 bolts are 45mm long.

NOTE: Vertical bolts do not fit through centre section tightening holes. Vertical bolts must be installed by twisting into place through open area above centre section cross tubes.

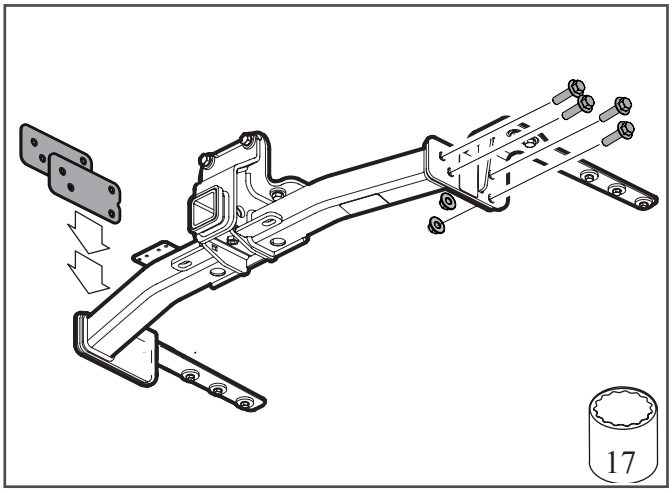

STEP 20

- Install 4x M12 x 35mm flange bolts (Item 18) & 2x M12 flange nuts (Item 19) in the RH side arm to centre connections as shown. Lightly tighten bolts.
- Measure horizontal clearance between towbar centre section & LH side arm and select appropriate number of shims (Item 11).

NOTE: Centre section to side arm M12 bolts are 35mm long.

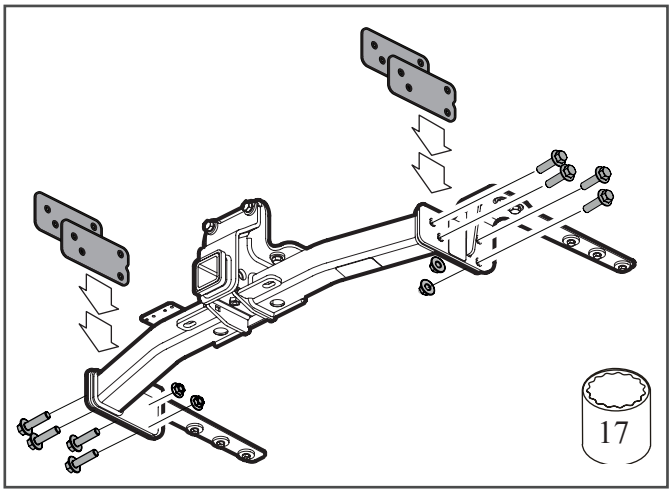

STEP 21

- Disassemble M12 x 35mm flange bolts & flange nuts from centre section to side arms and reassemble with choosen quantiy of shims.
- Repeat for LH side.
- Ensure the same number of shims are used on LH & RH sides.

NOTE: Centre section to side arm M12 bolts are 35mm long.

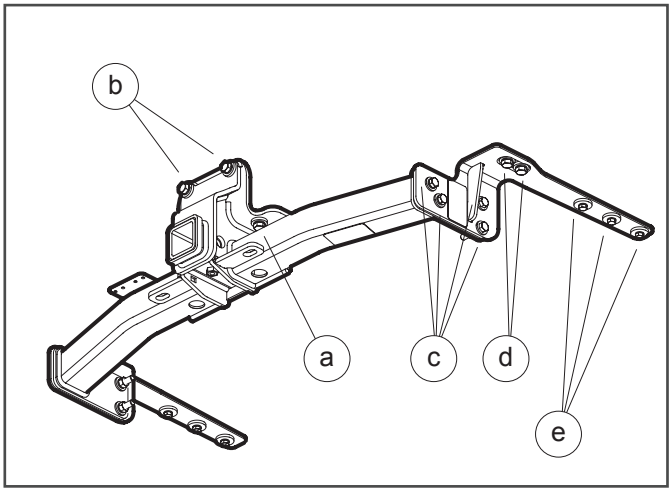

STEP 22

- Ensure all Towbar mounting faces are properly fitted against the chassis faces.
- Torque fasteners in the sequence shown below. First tighten all fasteners to 25% of the final recommended torque, as shown on page 3. Then, again in the same sequence to the final recommended torque.

a. M12 bolts (vertical) on centre section
b. M12 bolts (horizontal) on centre section
c. M12 bolts on sidearm to centre section
d. M12 bolts on sidearm to chassis
e. M8 bolts on sidearm to chassis
f. M8 bolt on fuel tank protector forward mount (not shown)

NOTE: When torquing or checking fasteners, hold nuts & tighten from bolt heads.

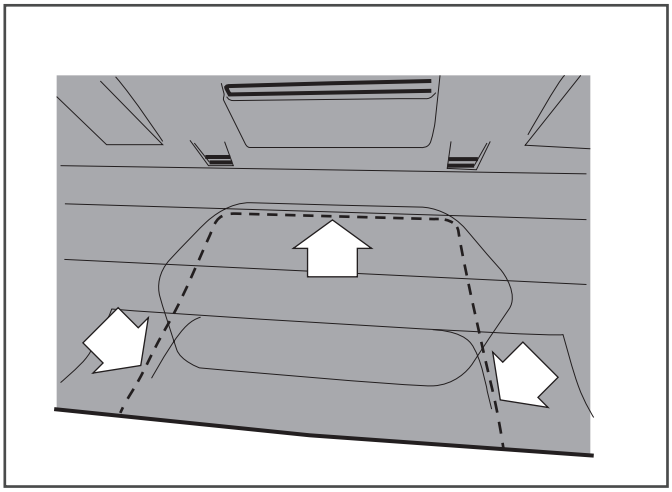

STEP 23

- Cut rear bumper using the scribe line located on the inside unpainted surface of the rear bumper.

IMPORTANT: Ensure the correct scribe line is used.

IMPORTANT: Ensure the rear bumper is cut accurately for the correct fitment of the Rear Cover Kit (Item 34).

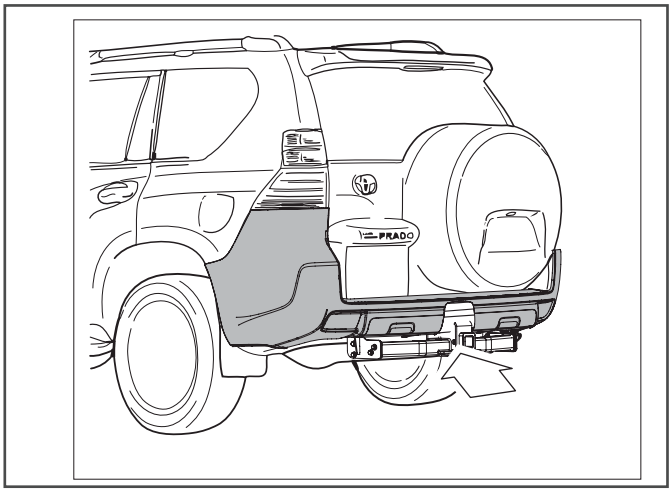

STEP 24

- Refit the exhaust by hooking the rubber hanger onto the pins on the new exhaust hanger bracket.
- Refit rear bumper to the vehicle.

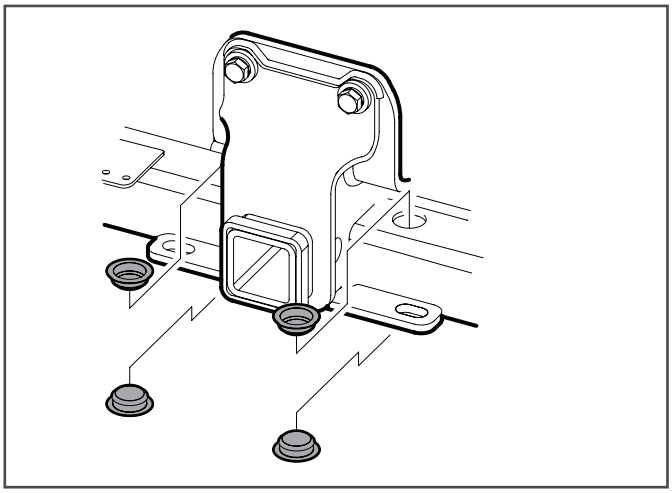

STEP 25

- Secure the Plastic Caps (Item 8) to the centre section as shown.

HINT: If there is paint build up on the center section preventing the plastic cap fittment, trim paint back and apply rust inhibitor (Item 16) to trimmed surfaces.

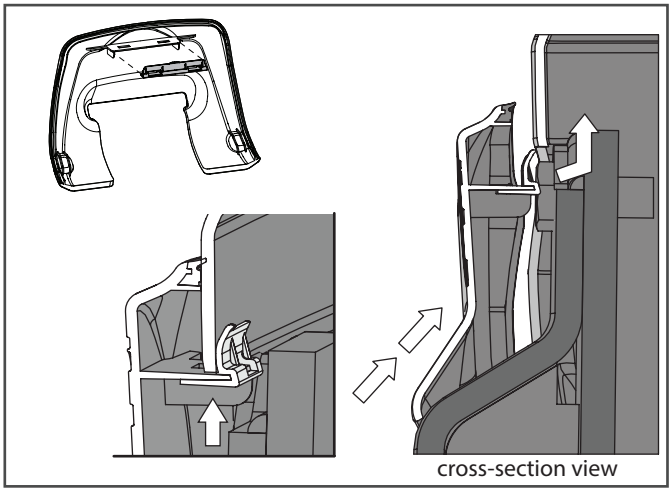

STEP 26

- Assemble the rear cover clip (item 25) to the rear cover (item 24) by sliding it onto the rib in the back of the rear cover until it locks into place. Ensure the cover clip is oriented correctly, as shown.
- Install the rear cover onto the bumper by sliding it up and forward along the towbar rear face. Continue this motion until the clip has located on the bumper cut edge. Once the clip is located, push the cover upward until the cut edge of the bumper has come to rest against the internal rib of the cover.

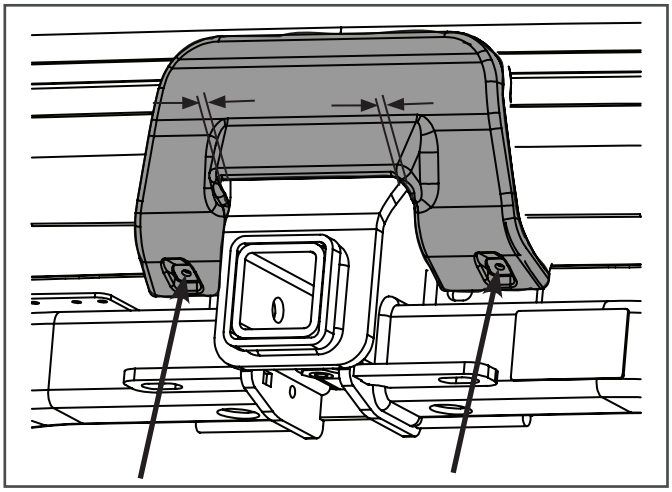

STEP 27

- Ensure the rear cover is centrally located.
- Hold the cover firmly against the bumper and drill through the lower mounting holes with a 5mm drill bit. Ensure the drill is angled perpendicular to bumper surface and use a 15mm drill stop to ensure the towbar is not damaged.

CAUTION: Be careful not to damage the garnish when drilling.

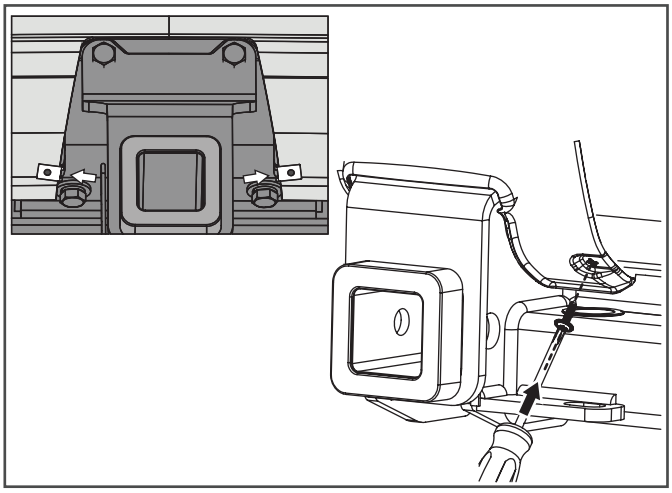

STEP 28

- Remove the cover from the bumper and de-burr the drilled holes.
- Install the 2x clip nuts (item 27) as shown so that the threaded portion of the clip nut is behind the bumper.
- Re-Install the cover as per step 26, and secure with 2x self tapping screws (item 26).
- Torque garnish screws.

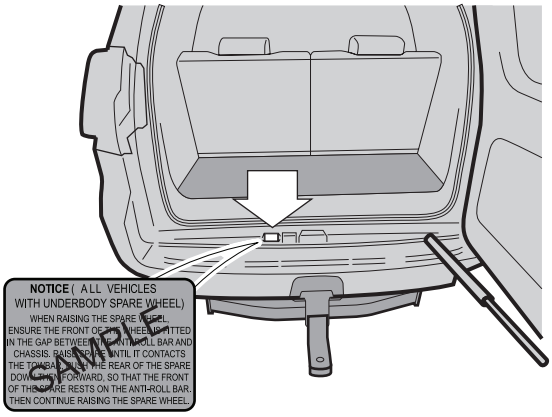

STEP 29

- For vehicles fitted with an underbody spare wheel, affix the spare wheel warning label (Item 23) in the position shown.
- Re-fit spare wheel and raise into position. When raising the spare wheel, ensure the front of the wheel is fitted in the gap between the anti-roll bar and chassis. Raise spare until it contacts the Towbar, push the rear of the spare down, then forward, so that the front of the spare rests on the anti-roll bar, then continue raising the spare wheel.

- For vehicles not fitted with an underbody spare wheel, discard the spare wheel warning label.

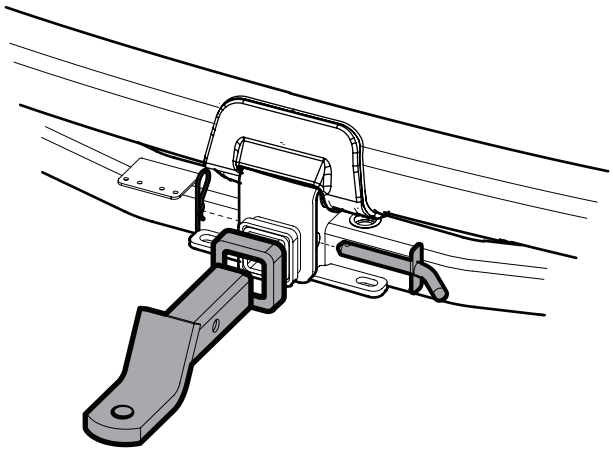

STEP 30

- Install the hitchbox collar cover (Item 13) by applying firm, even pressure.
- Insert the tongue (Item 2) into the hitchbox and secure with the pull pin (5) and R-clip (6).

NOTE: The tongue may be inverted to suit the customer's trailer height requirements.

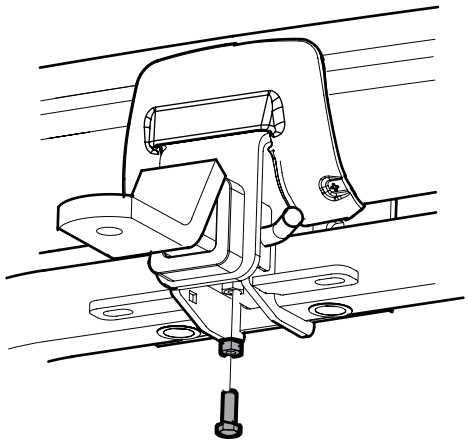

STEP 31

- An anti-rattle bolt and nut are provided to assist with noise associated with tongue free play. To utilise this feature loosely install the M10 x 35mm bolt (item 9) and M10 nut (Item 10) into the weld nut on the bottom of the hitchbox, as shown.
- To lock the tongue in position tighten the bolt to a maximum torque of 80Nm.
- Lock the bolt in position by tightening the nut.

- To remove the tongue, loosen the anti-rattle bolt & nut first.

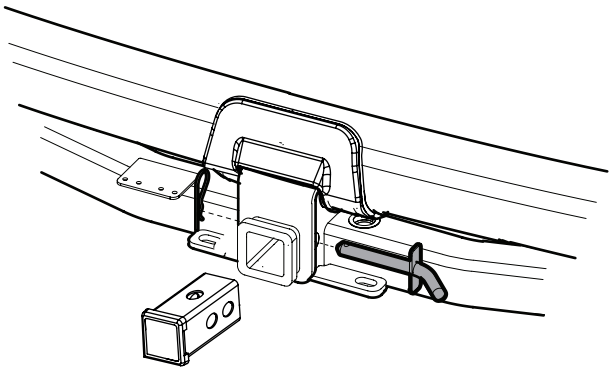

STEP 32

-When tongue is removed install the hitchbox insert (item 22) with pull pin (item 5) and r-clip (item 6).

NOTE: Do not tighten the anti-rattle bolt onto the hitchbox insert.