TOYOTA GENUINE

PARTS, SERVICE & ACCESSORIES

FJ CRUISER

May 2010 Production Onwards

ACRYLIC HEADLAMP COVERS

Installation Instructions

Accessory Part No. PZQ14-60120 Installation Time: Approx. 15 mins

Place these instructions in vehicle's glove box after installation is complete

Care Instructions:

Do not slam bonnet.

Clean Headlamp Covers with a mild detergent and water solution.

Do not use automatic car wash.

Do not use abrasive, spirit or solvent based cleaners.

Item	Component Name	Qty	Part number
1	Headlamp Covers Set	1	PZQ14-60120
2	Metal Clips	4	PZQ14-60120-FK
	Abrasive Resistant Tapes	4	
	Washers	4	
	Screws	4	
	Alcohol Wipe	1	
	Fitting Instructions	1	

x 4 METAL CLIPS

x 4 ABRASIVE RESISTANT TAPES

x 4 WASHERS

x 4 SCREWS

x 1 ALCOHOL WIPE

x 1 FITTING INSTRUCTION

FITTING KIT
PZQ14-60120-FK

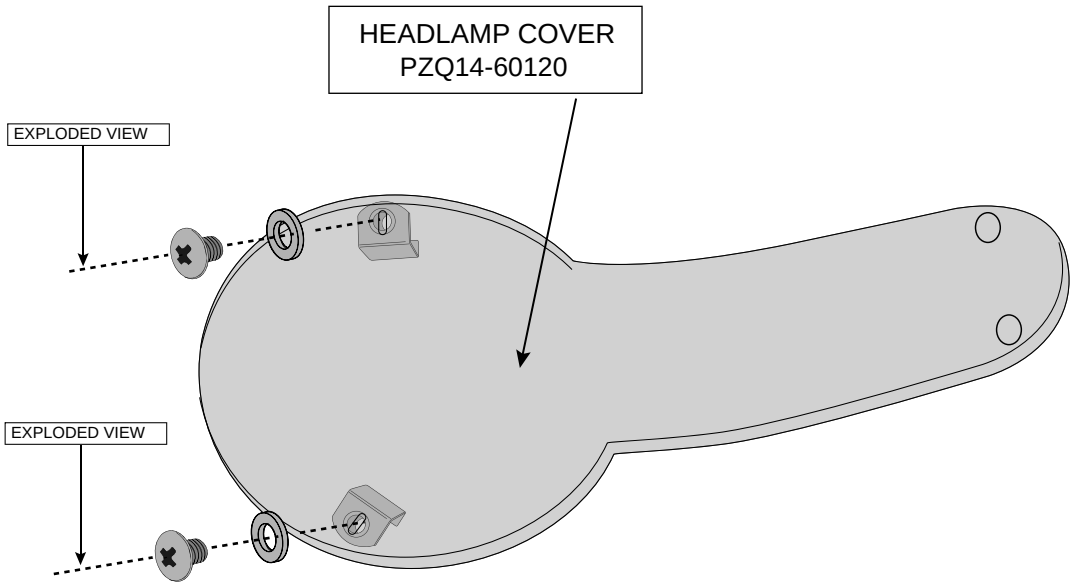

RHS part is mirror image

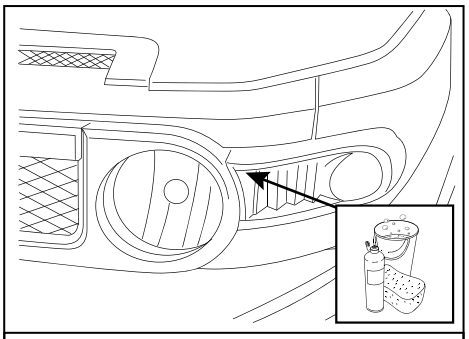

Diagram #: 1

1. Read installation instructions thoroughly before commencing installation. Thoroughly clean and dry headlamps and surrounding areas. **See Dia #1.**

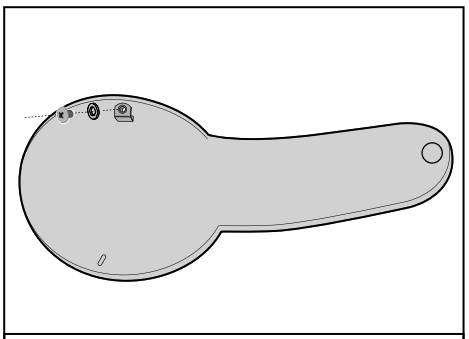

Diagram #: 2

2. Attach the top clip to the Headlamp Cover, do this using screw and washer provided. **See Dia #2.**

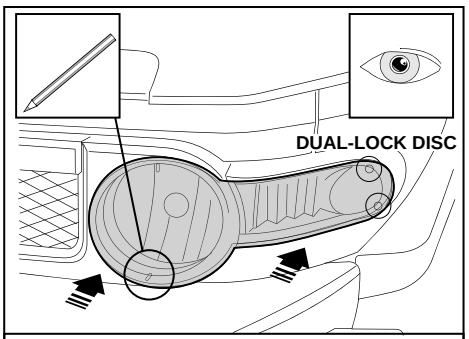

Diagram #: 3

3. Trial fit the Headlamp Cover centrally on the headlamp by carefully locating the top clip under the headlamp assembly. Note the slot in the bottom of the Headlamp Cover and the dual lock-discs. Mark these locations onto the headlamp assembly with a non-permanent marker. Remove the Headlamp Cover. **See Dia #3.**

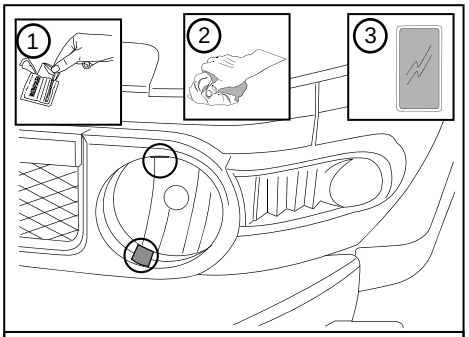

Diagram #: 4

4. At the previously noted and marked slots positions, clean the headlamp lens with the alcohol wipe provided. Remove any residue with a clean dry cloth. Adhere the abrasive resistant tape strips provided to the cleaned areas. **See Dia #4.**

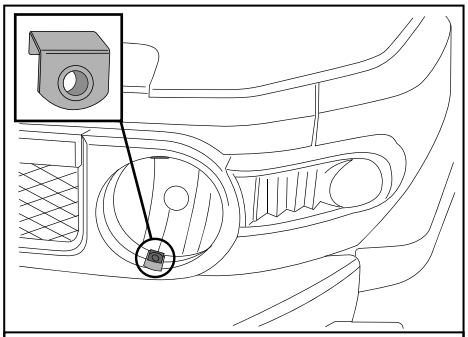

Diagram #: 5

5. Fit the metal clip to the bottom of the headlamp at the previously noted position. Ensure that the metal clip are located on the abrasive resistant tape strip and not on the bumper. **See Dia #5.**

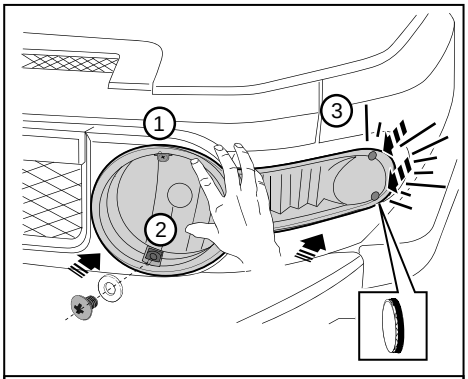

Diagram #: 6

6.To complete installation, insert the top clip between the headlamp assembly. Position the bottom slot over the metal clip aligning the hole in the clip with the slot in Headlamp Cover, press down over the metal clips and at the same time apply upwards pressure to Headlamp Cover. Then secure the Headlamp Cover with screws and washers provided. **See Dia #6**.

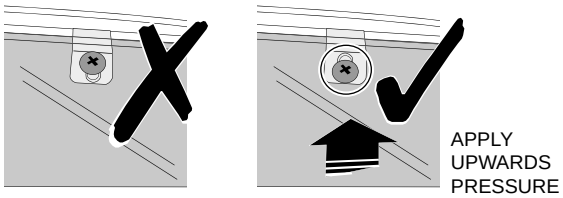

IMPORTANT: Note that screw is as close to **bottom** of vertical headlamp cover slot as possible.

Once the Headlamp Cover is correctly positioned, Clean the headlight lens with the alcohol wipe provided, as shown. Remove any residue with a clean dry cloth. Peel the protective strips from dual-lock discs then apply pressure to the dual-lock discs to ensure it adheres to the headlamp.
TO REMOVE: Disengage the dual-lock discs, undo the screws from metal clips and carefully ease the Headlamp Cover from headlamp assembly.