All Model with Accessory Bullbar
Additional Service Requirement - Severe Conditions

Many new Toyota vehicles are fitting with Toyota Genuine Accessory Bullbars and on occasion these vehicles are operated in severe operating condition such as rough / corrugated roads either frequently or typically during four wheel drive holidays or similar.

Maintenance for severe operating conditions for vehicles that are used in these conditions requires inspection of chassis / under body mounting bolts.

Inspection of the Bullbar mounting bolts and brackets will not form part of the severe maintenance inspection.

Note: Owners that operate their vehicles in any rough road conditions should confirm that a severe maintenance schedule is adopted and inspected of the Bullbar mounting bolts and brackets can be conducted by the servicing dealer.

Typical Bullbar Mounting Configuration

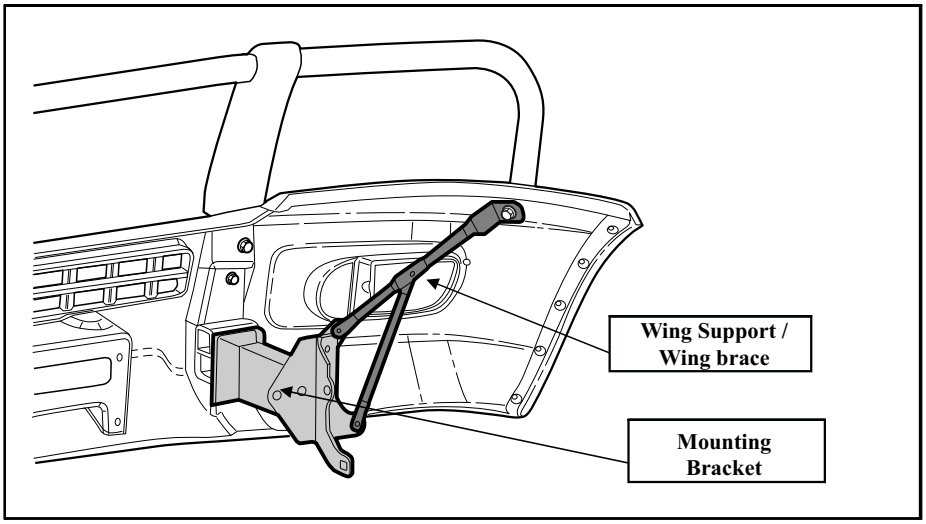

Note: Bullbar design varies by model; the above picture shows a typical Bullbar configuration.

Inspection

During severe maintenance inspection interval if vehicle is fitted with an accessory Bullbar:

- Inspect mounting bolts for Bullbar brackets and braces for looseness or signs of movement.
- Inspect Bullbar brackets and braces for integrity, damage or looseness.

This page is intentionally blank.

Accessory Part No:
PZQ2989272 - Steel Bull Bar – Premium Hilux Narrow Body (No Fog lights)
PZQ2989277 - Steel Bull Bar – Premium Hilux Wide Body (No Fog lights)
PZQ2989282 - Steel Bull Bar – Premium Hilux Wide Body (with Fog lights)
PZQ2989325 - Steel Bull Bar – Commercial Hilux Narrow Body
PZQ2989330 - Steel Bull Bar – Commercial Hilux Wide Body
PZQ2989296 - Steel Bull Bar – Premium Fortuner (Hi grade headlamps- No Fog lights)
PZQ2989336 - Steel Bull Bar – Premium Fortuner (lo grade headlamps- No fog lights)
PZQ2989366 - Steel Bull Bar – Premium Fortuner (Hi grade headlamps- with Fog lights)
PZQ29892WK - Winch Mounting Kit – Steel Bull Bar

JULY 2015 PRODUCTION ONWARDS

Fitting Times:

Steel Bullbar pickup only: 2 hours 30 minutes
Steel Bullbar Fortuner: 2 hours 40
Fog Lamps: +15 minutes
Winch Mounting Kit: +40 minutes
Winch Kit if Bullbar is already fitted: 3 hours 40 minutes

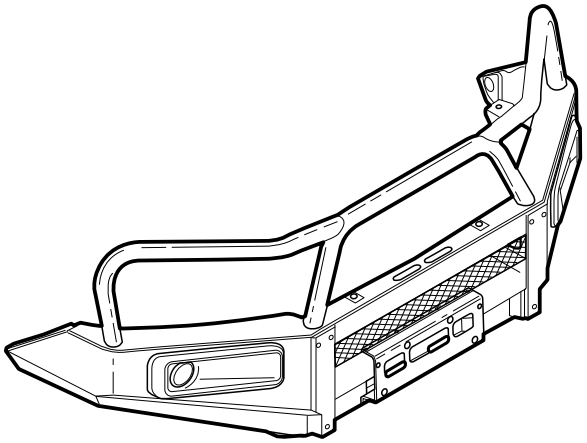

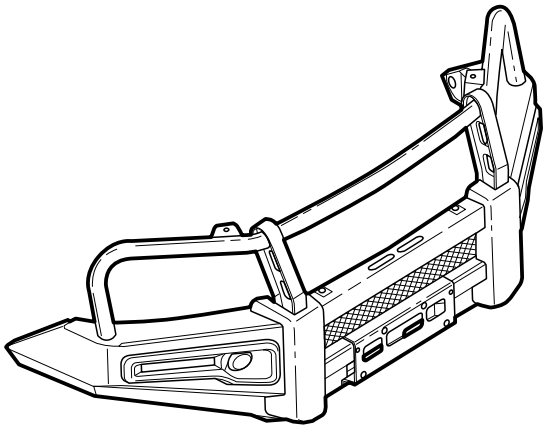

Bullbar

Fitting Instructions

General Notes

- Read through the fitting instructions before installation of accessory.
- Always install the accessory following the fitting instructions. Failure to do so may cause damage to the vehicle or the accessory.

Note: For the purpose of these instructions, vehicle sides noted (left hand side, right hand side) is always referenced in relation with the front of the vehicle as facing forwards.

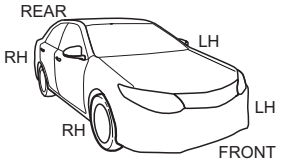

Safety Notes

- Check that all work practices comply with safety standards.
- Please wear appropriate clothing and use safety equipment.

General User Information

IMPORTANT ⚠

- Do not attach the Bullbar to the vehicle using anchorages not intended for this purpose (e.g. engine mounting bolts).
- Do not use any other mounting location/method other than described in these fitting instructions.
- Do not use this product for any vehicle make or model other than those specified by the Bullbar manufacturer.
- Do not repair or modify the structure of the Bullbar and/or it's mounting bracket in any way. Repair or modification can result in non compliance with ADR 69/00 Frontal Impact Requirements and may effect proper operation of the Air bag system resulting in serious injury.
- Do not remove the compliance plaque or label from the Bullbar.
- Please read these fitting instructions carefully before installation, paying special attention to all notices and caution notes (identified with ⚠). Failure to do so may result in damage to parts or injury to installer or customer.
- A Torque wrench must be used where specified and correct sequence must be followed. Do not use a rattle gun.
- Record batch number on installation checklist (supplied in these instructions).
- Toyota recommends multi tool for cutting all plastic parts (refer tools required list on Page 8 of these instructions).

Compatibility

This bullbar is compatible with a wide range of Toyota Genuine Accessories. Please consult your Toyota Dealer for more information.

– Parts Supplied

Main Carton

A

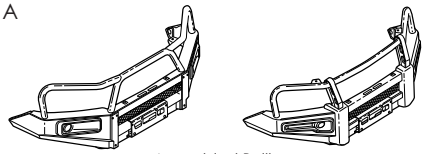

Assembled Bullbar
Qty x1

B

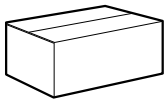

Main Fitting Box
Qty x1

C

Fog Lamp Bag
(if applicable)
Qty x1

D

Patch Harness Bag (not supplied with Commercial Bullbar)
PZQ8589580 - Lo Grade Hilux, PZQ8589590 - Hi Grade Hilux,
PZQ8589610 - Lo Grade Fortuner, PZQ8589620 - Hi Grade Fortuner
Qty x1

E

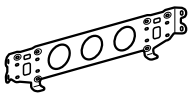

Wing Brace Mount
(Commercial only)
Qty x1

Main Fitting Kit - Box

A

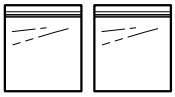

Main Fitting Kit (bags)
Qty x2

B

Undercover
Fitting Kit (bag)
Qty x1

C

LH FRONT
WING BRACE
Qty x1

D

RH FRONT
WING BRACE
Qty x1

E

LH REAR
WING BRACE
Qty x1

F

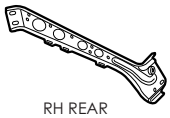

RH REAR
WING BRACE
Qty x1

G

LH INBOARD
CHASSIS GUSSET
Qty x1

H

RH INBOARD
CHASSIS GUSSET
Qty x1

I

LH OUTBOARD
CHASSIS GUSSET
Qty x1

J

RH OUTBOARD
CHASSIS GUSSET
Qty x1

K

LH WING
BRACE MOUNT
(Premium/Fortuner only)
Qty x1

L

RH WING
BRACE MOUNT
(Premium/Fortuner only)
Qty x1

M

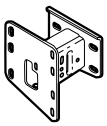

LH CRASH BOX
Qty x1

N

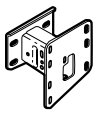

RH CRASH BOX
Qty x1

O

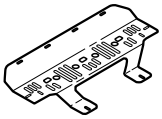

CENTRE UNDERCOVER
Qty x1

P

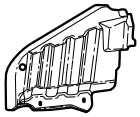

LH SPLASH SHIELD
Qty x1

Q

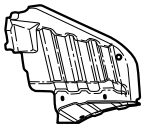

RH SPLASH SHIELD
Qty x1

R

PINCH WELD
Qty x2

S

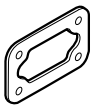

SPACER PLATE -
5mm THICK
Qty x2

T

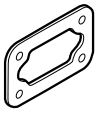

SPACER PLATE -
2.5mm THICK
Qty x4

– Parts Supplied

Main Fitting Kit - Bag 1

A M10 HARDENED WASHER 25mm OD x 10.5mm ID x 4mm THICK Qty x38	B M12 HARDENED WASHER 25mm OD x 12.5mm ID x 4mm THICK Qty x4	C M10 x 1.25P FLANGED NUT Qty x28	D OUTER CHASSIS GUSSET SHIM (2mm THICK) Qty x2	E M12 x 45 x 1.25P FLANGED BOLT Qty x2	F #10 x ¾" SELF TAP PAN HEAD SCREW Qty x4
G SELF RETAINING GROMMET Qty x4	H INNER CHASSIS GUSSET SHIM (1mm THICK) Qty x4				

Main Fitting Kit - Bag 2

A INNER CHASSIS GUSSET SHIM (2mm THICK) Qty x2	B M12 x 35 x 1.25P FLANGED BOLT Qty x6	C OUTER CHASSIS GUSSET SHIM (1mm THICK) Qty x2	D M10 x 35 or 40 x1.25P FLANGED BOLT Qty x22	E CHASSIS GUSSET NUT PLATE Qty x2	F 200mm CABLE TIE Qty x15
G 300mm CABLE TIE Qty x2	H FIR TREE CLIP Qty x2	I DOUBLE WATER HOSE CLIP Qty x1	J M10 HARDENED WASHER 25mm OD x 10.5mm ID x 4mm THICK Qty x2		

Undercover Fitting Kit - Bag

A M6 OVERSIZED WASHER 35mm OD x 6.5mm ID x 1.6mm THICK Qty x1	B M8 HARDENED WASHER 24mm OD x 9mm ID x 2mm THICK Qty x8	C M6 WASHER 22mm OD x 6.5mm ID x 2mm THICK Qty x19	D NUT FLANGED M6x1.0 Qty x1	E M8 x 1.25P FLANGED NUT Qty x2	F M6 x 20 x 1P HEXALOBULAR PAN HEAD BOLT Qty x20
G M8 x 20 x 1.25P HEXALOBULAR PAN HEAD BOLT Qty x6	H M8 x 30 x 1.25P HEXALOBULAR PAN HEAD BOLT Qty x2	I M6 x 1P PREVAILING TORQUE U-NUT Qty x19	J 10mm UNDERCOVER THICK SPACER Qty x2	K UNDERCOVER ATTACHMENT BRACKET Qty x1	

– Parts Supplied

Fog Lamp Bag (if applicable)

A 4.8 Dia. POP RIVET (6-3) Qty x8	B #8 x ¾" SELF TAP PAN HEAD SCREW Qty x6	C FOG LIGHT MOUNT GROMMET Qty x6	D FOG LIGHT BRACKET LH Qty x1	E FOG LIGHT BRACKET RH Qty x1	F FOG LAMP EXTENSION PATCH Qty x2
G CABLE TIE, 200 x 4.5mm Qty x4					

Steel Bullbar Winch Adaptor - Bag

A COVER WINCH Qty x1	B GRILLE WINCH Qty x1	C BOLT TORX PAN HEAD M4x16x0.7 PC8.8 Qty x8	D BOLT TORX PAN HEAD M6x20x1.0 PC8.8 Qty x5	E BOLT TORX PAN HEAD M8x20x1.25 PC8.8 Qty x3	F NUT FLANGED M4x0.7 Qty x8
G NUT FLANGED M6x1.0 Qty x5	H NUT FLANGED M8x1.25 Qty x4	I POP RIVET - 1/8 (3.2mm) Aluminium 4-2 Qty x4	J XMAS TREE D16xD8x20LG#640 Qty x5	K PLUG ATTACHMENT BRACKET Qty x1	L HINGE Qty x2
M KNULRED LOCKING STUD Qty x2	N SPRING CLIP Qty x2	O LOCK WASHER Qty x2	P OVERSIZED WASHER 65x8.5x5 Qty x3	Q CABLE TIE, 200 x 4.5mm Qty x3	

– Tools and Materials Required

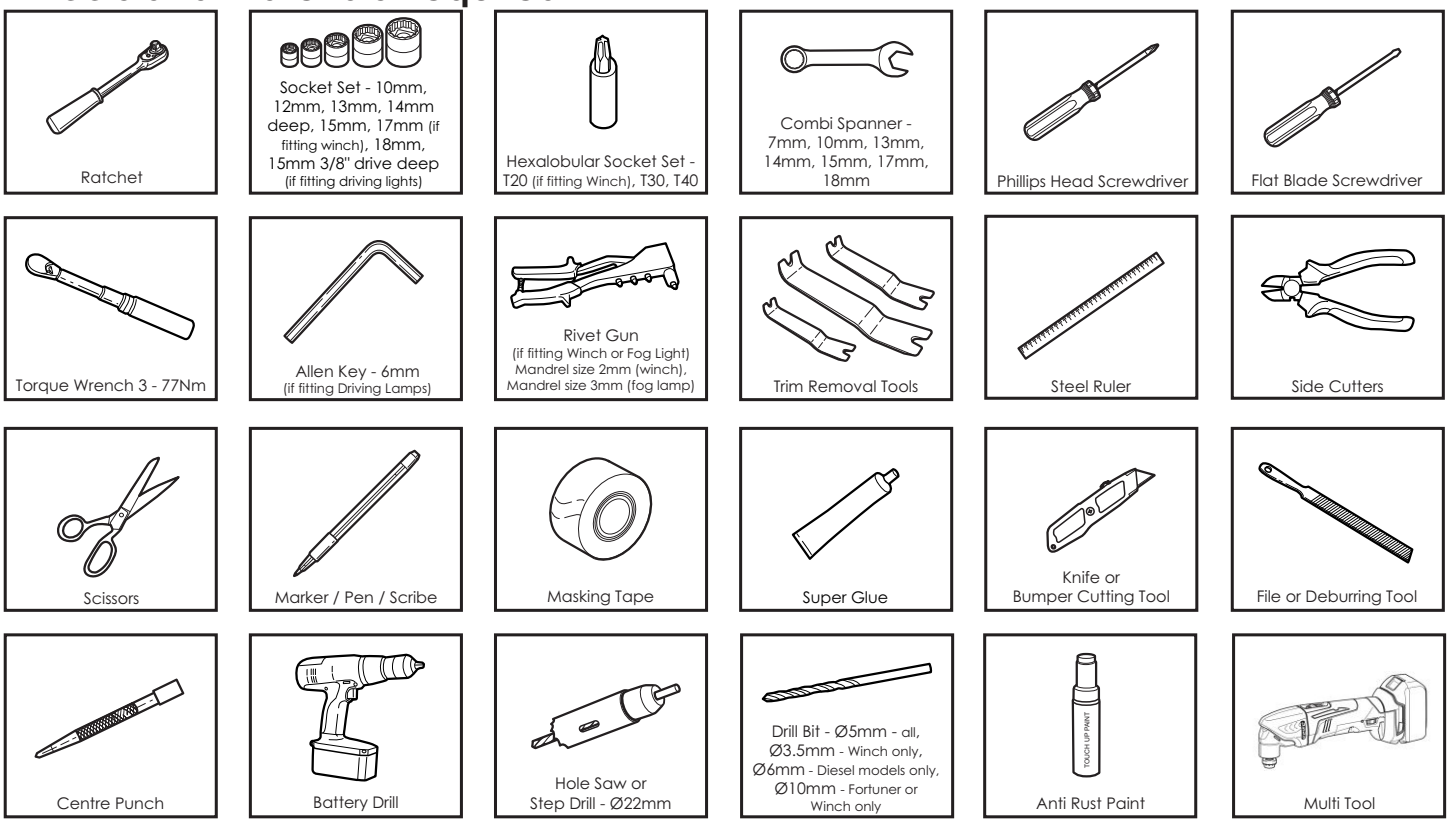

Step 1

- Open the carton and identify all components from the parts suppled sheet.

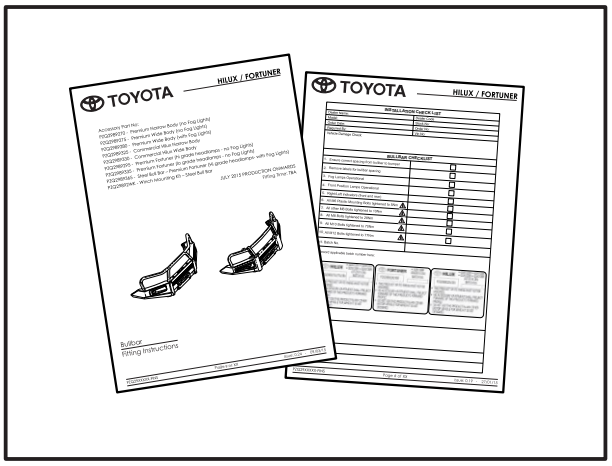

Step 2

- Record bullbar batch number on check sheet on last page of instructions.

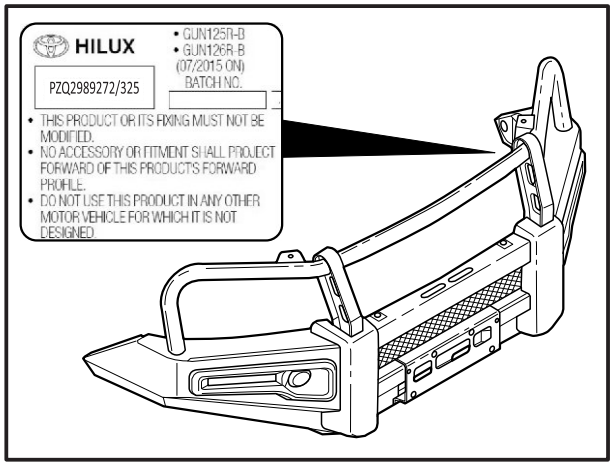

Step 3

- Note down all the clock and radio settings.
- After stopping the vehicle, wait 60 seconds and disconnect the negative terminal from the battery cable.
- Cover the negative terminal with tape to prevent accidental contact.

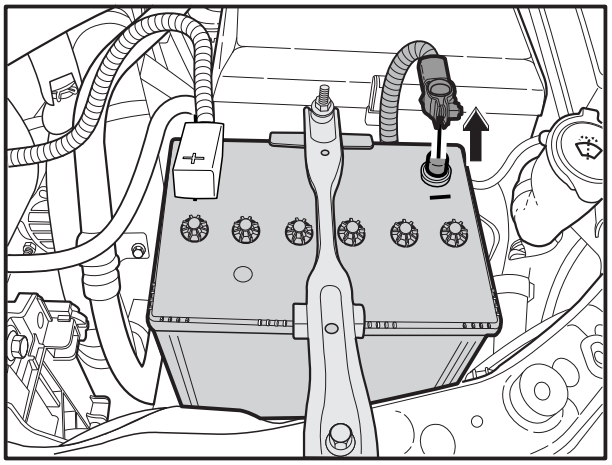

Tools Required:

10mm spanner

Step 4

Important

Refer to the vehicle's workshop manual when removing components from the vehicle.

- Remove plastic radiator cover **(1)**. Retain cover and push clips for re-fitment (eight locations).

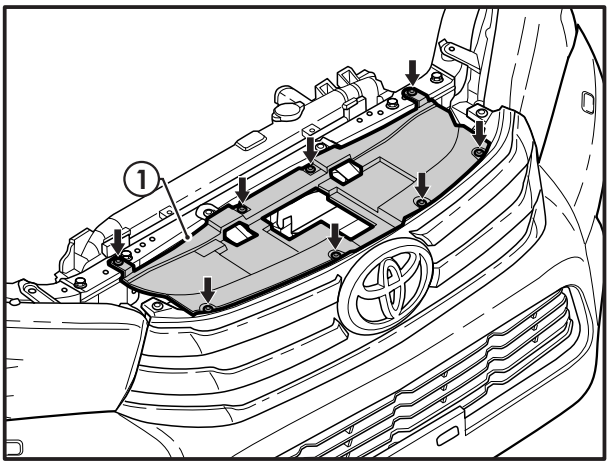

Tools Required:

Trim removal tool

Step 5

- Remove bumper **(1)** and grille **(2)** by removing fasteners as shown in steps 5.1 to 5.5 (refer workshop manual).

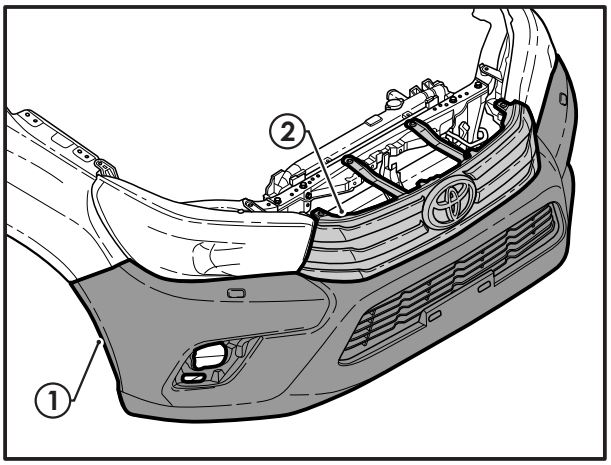

Tools Required:

10mm socket

Flat blade screwdriver

Trim removal tool

Step 5.1

- Remove 4 bolts attaching grille to vehicle **(1)**. Keep fasteners for re-fitment.
- If fitting to Fortuner, carefully remove grille from bumper.
- Remove 3 x screws in lower radiator region **(2)**. **Note: Remove lower of two fasteners on each side. Keep fasteners for re-fitment.**
- Reach down to remove 2 clips **(3)** in area shown. Keep fasteners for re-fitment.

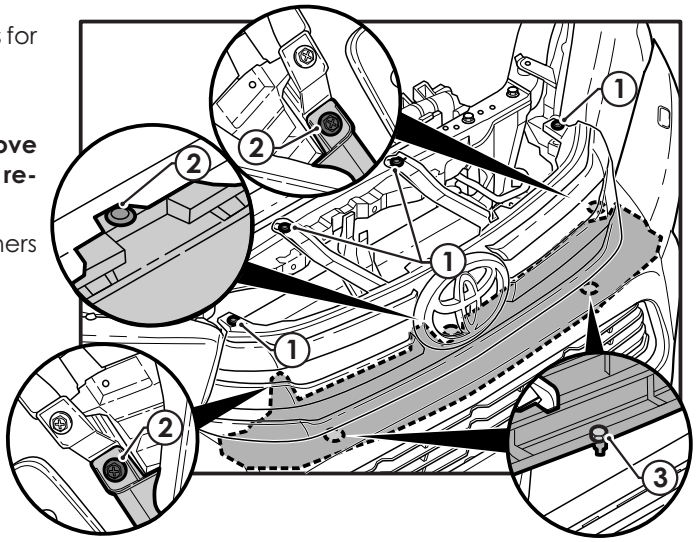

Tools Required:

10mm socket

Clip removal tool

Step 5.2

- Remove 2 x small plastic trim clips in wheel arch (1 per side) **(1)**. Keep fasteners for re-fitment.
- Remove 2 x plastic quarter turn clips from wheel arch area (1 per side) **(2)**.

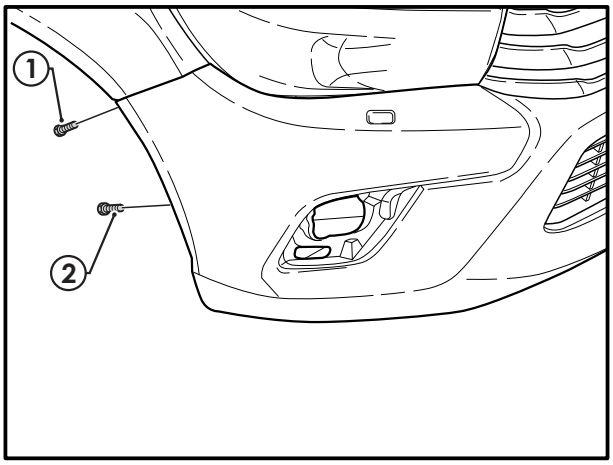

Note: For Fortuner, item **(1)** is a plastic quarter turn clip and item **(2)** is plastic trim clip. Always keep upper fastener for re-fitment and discard lower fastener.

Tools Required:

Clip removal tool

Flat blade screw driver

10mm socket

Step 5.3

- Remove and discard 6 screws **(1)** from side plastic fender liner (3 per side).

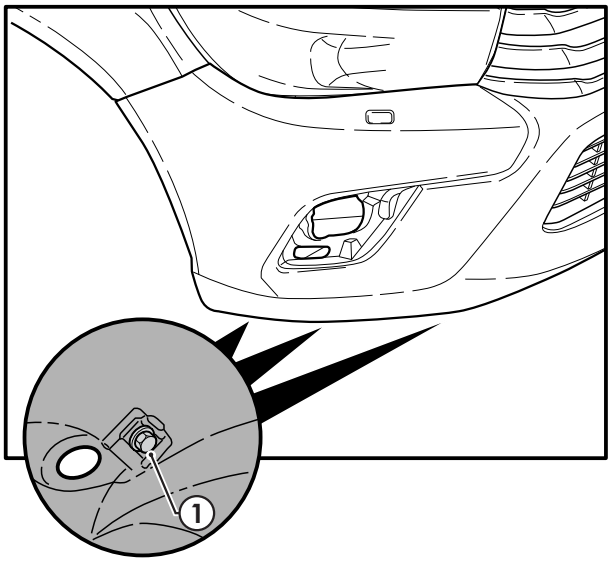

Tools Required:

10mm socket or Phillips head screw driver

Step 5.4

- Remove and discard 3 bolts **(1)** connecting main bumper to centre undercover.

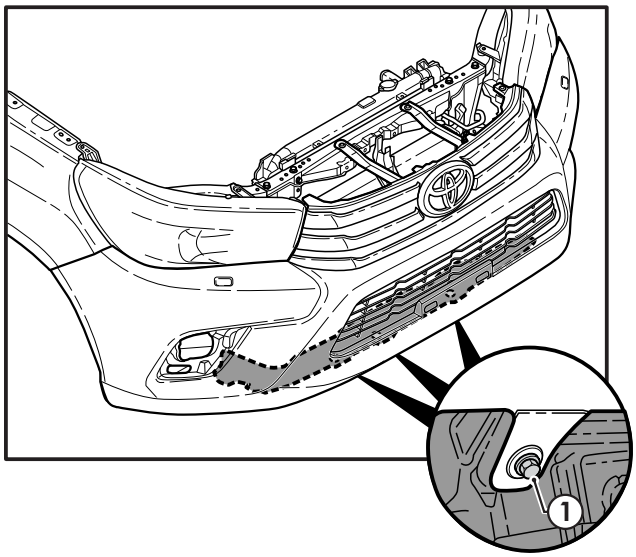

Tools Required:

10mm socket

Step 5.5

- Carefully remove bumper **(1)** and grille **(2)** from vehicle and place on axle stand.
- If fitted, unclip fog lamp wiring connector **(3)**.

Important

To protect installer from injury, tape sharp edges and protruding brackets.

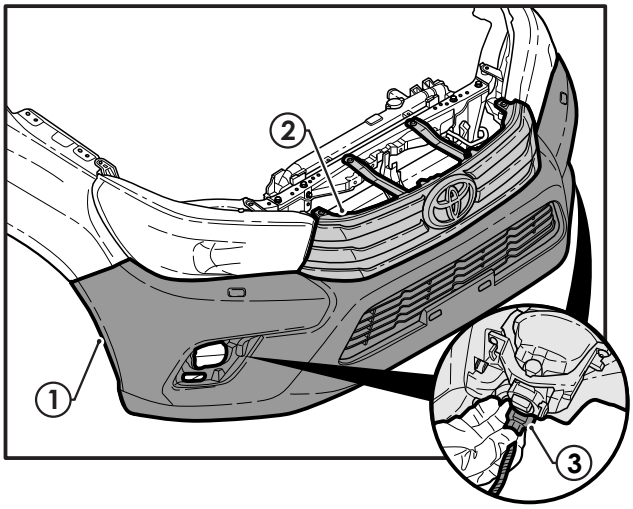

Step 6

- Remove and discard the bumper absorber **(1)** and three bolts **(2)**. Note: Detach the clip **(3)** above the centre bolt.

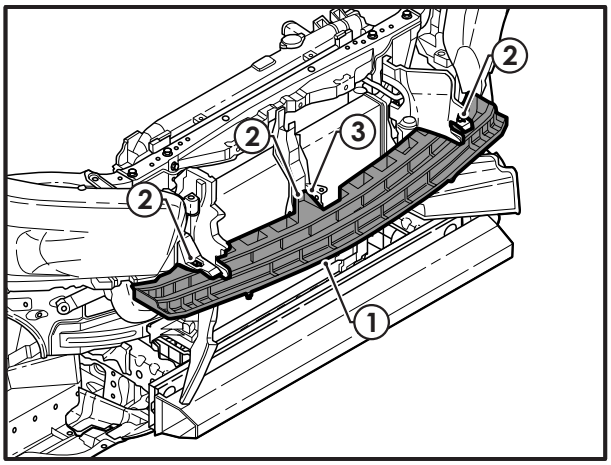

Tools Required:

10mm socket

Step 7

- Remove both upper radiator air deflectors **(1)** (keep for cutting and re-fitment).
- Remove and discard plastic absorber **(2)** by wedging trim removal tool between plastic and steel reinforcement.

Important

Take care not to break air deflector clips.

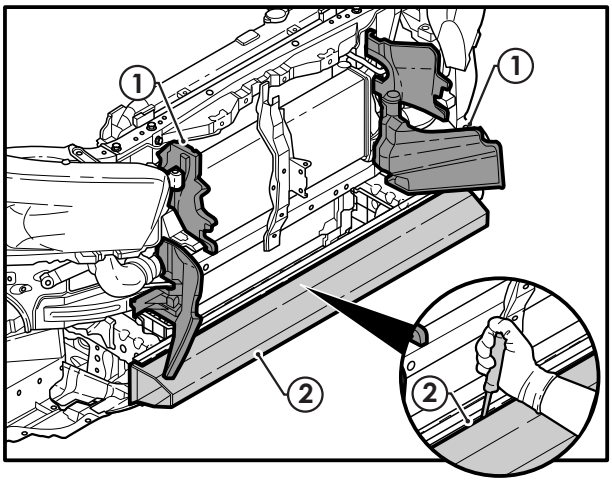

Tools Required:

Trim removal tool or Flat blade screwdriver

Step 8

- Unclip and discard lower plastic air deflectors **(1)**.
- Remove and discard reinforcement beam **(2)** and four M10 bolts.

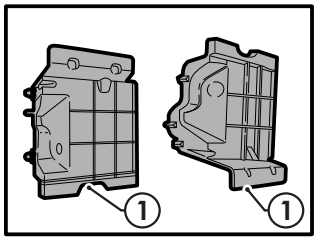

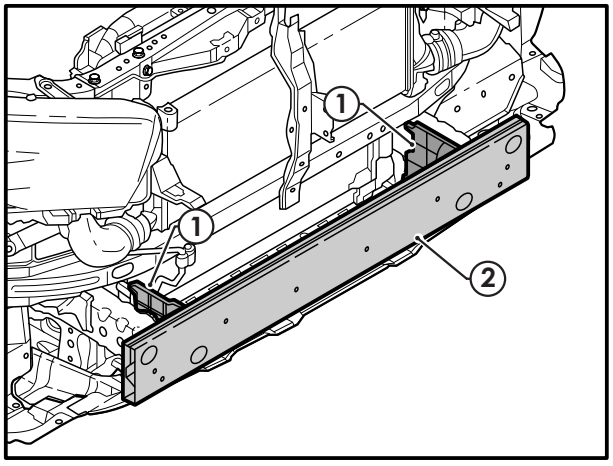

Tools Required:

14mm socket

Step 9

- Remove and discard plastic centre undercover **(1)** and fasteners (5 x plastic trim clips **(2)** & 2 x bolts **(3)**).

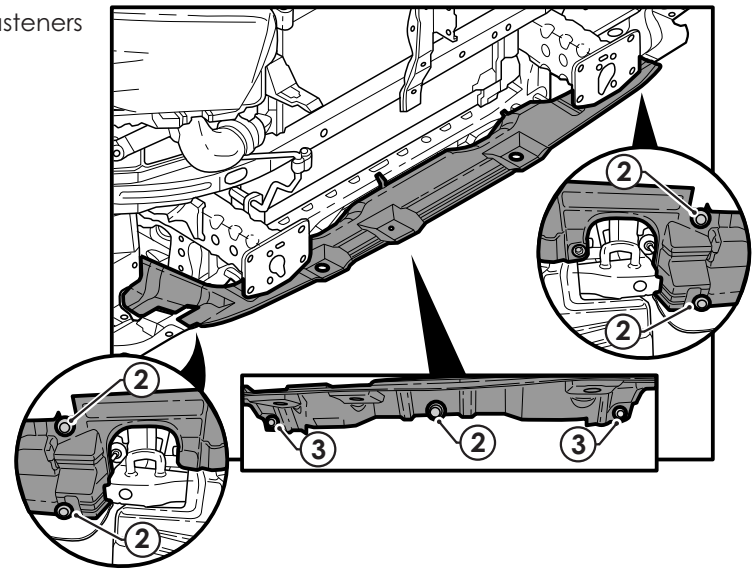

Tools Required:

10mm socket

Clip removal tool

Step 10

- Cut fender liner **(1)** by following the cut instructions. Refer to steps at back of these instructions.

Important	**Ensure the correct cut template is used for the vehicle type**
Important	**Take care when cutting. Ensure protective gloves are worn.**

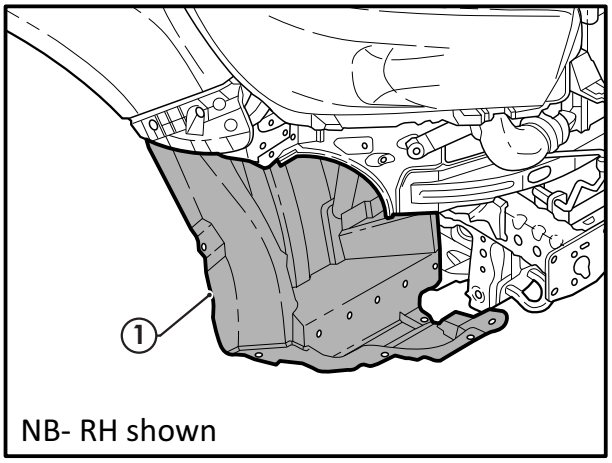

Tools Required:

Multi tool, Ruler,

Marker pen, Trim removal tool

Step 11

- Fit hose clip **(1)** to washer bottle **(2)** and clip in washer hose(es).

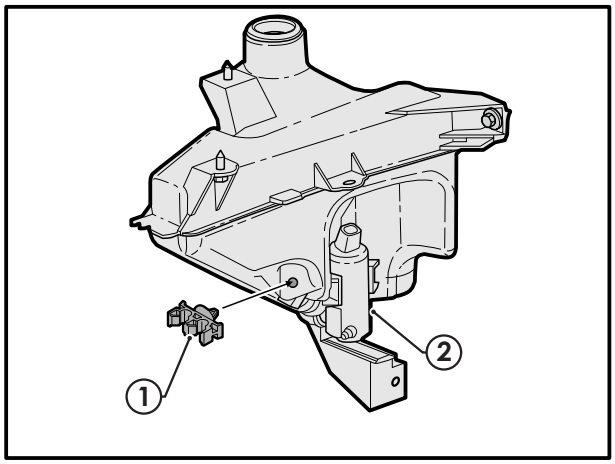

Step 12

- Orientate RH air deflector as shown.
- Establish feature line **[A]**.
- Mark line **(1)** 60mm above feature line.
- Mark line **(2)** 20mm above feature line.
- Join lines 1 and 2 to form line **(3)**.
- Cut along marked lines.
- De-burr cut edges.
- Drill 6mm hole **(4)** in location shown. **Do not drill if fitting to petrol model vehicle.**

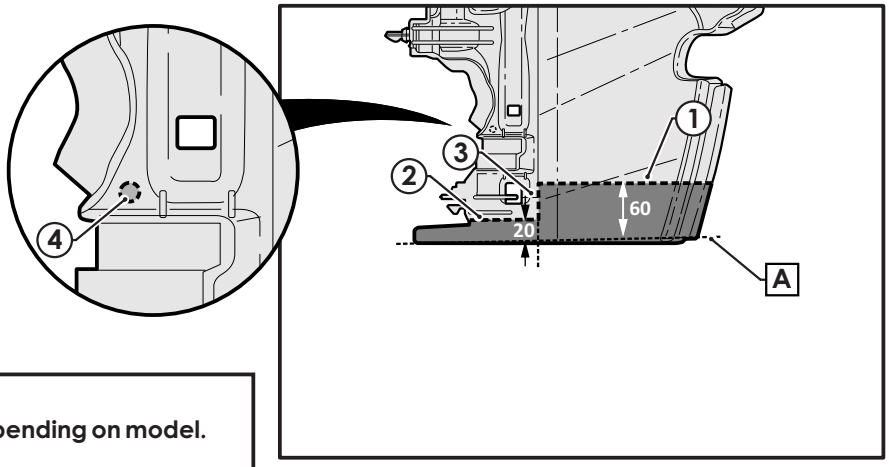

Important

Deflector views may differ slightly depending on model.

Tools Required:

6mm drill bit

Multi tool, Steel ruler, Marker

Step 13

- Orientate LH air deflector as shown.
- Establish feature lines **[A]** and mating edge **[B]** as shown.
- Mark line **(1)** 95mm above feature line **[A]** from very LHS of the deflector to the main vertical feature line as shown.
- Mark line **(2)** 20mm from mating edge **[B]** and 22mm up from feature line **[A]**.
- Join lines 1 and 2 to form straight line **(3)**.
- Cut along marked lines.
- De-burr cut edges.

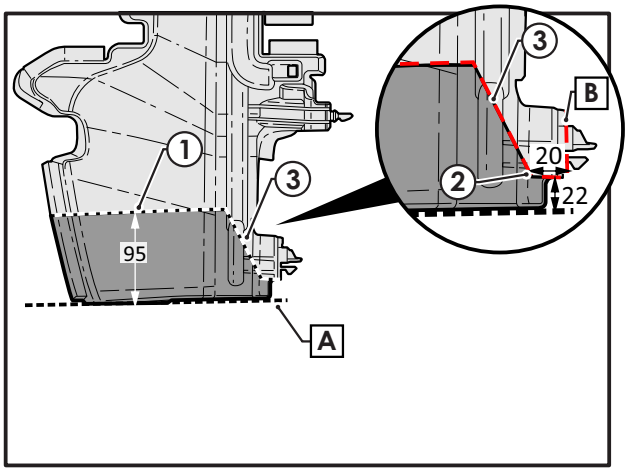

Important

Deflector views may differ slightly depending on model.

Tools Required:

Multi tool, Steel ruler, Marker

Step 14

If fitting to diesel vehicle, continue with Step 14, otherwise, proceed to Step 15:

- Refit both air deflectors **(1)** to vehicle and secure with 300mm cable ties **(2)** around intercooler mounts. Cut excess length of cable ties.

Important

Take care when cutting. Ensure protective gloves are worn.

Proceed to Step 16.

Tools Required:

Side cutters

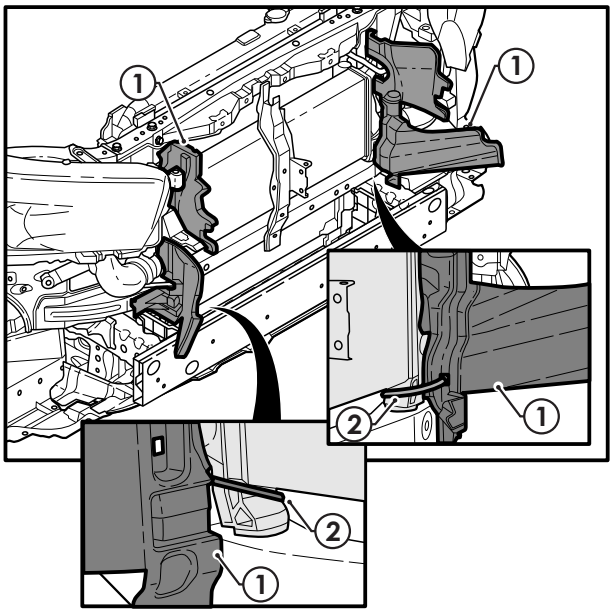

Step 15

If fitting to petrol vehicle, continue with Step 15, otherwise, proceed to Step 16:

- Refit both air deflectors **(1)** to vehicle and secure with 300mm cable ties **(2)** through radiator mount. Cut excess length of cable ties.

Note: Temporarily remove plastic guarding to allow cable tie routing.

Tools Required:

Side cutters

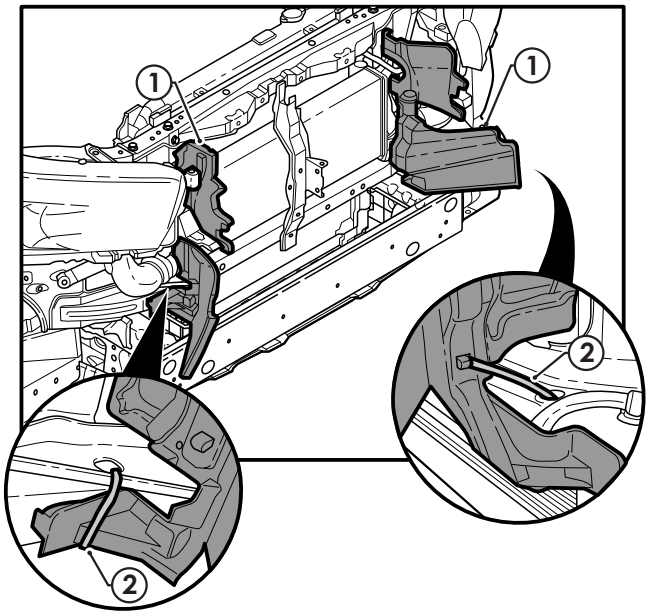

Step 16

If fitting driving light, continue with Step 16, otherwise proceed to Step 17.

- Route driving light harness by following the accessory fitting instructions.

Note: Refer to accessory part numbers at the front of these instructions.

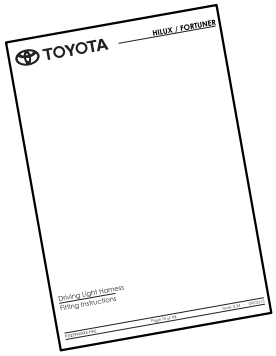

Step 17

If fitting Winch continue with Step 17 otherwise proceed to Step 18.

- Fit new front springs by following the accessory instructions.

Note: Refer to accessory part numbers at the front of these instructions.

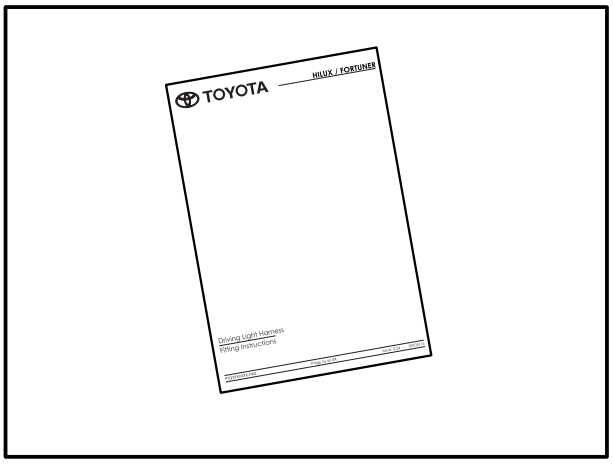

Step 18

- Cut bumper **(1)** as per template. Refer to template page on the back of the instructions.
- If fitting Winch cut centre bumper for viewing access. Refer to winch instructions.

Important

Ensure the correct cut template is used for the vehicle type.

Tools Required:

Multi tool

Ø22mm Hole Saw

Deburring tool or file

Marker pen

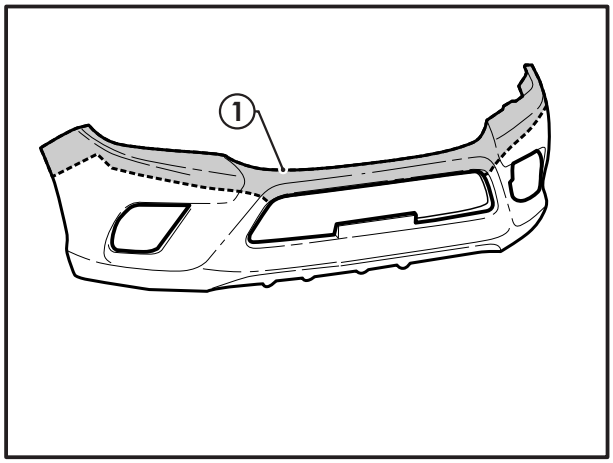

Wide bumper body shown for illustration purposes.

Step 19

- Fit pinch weld **(1)** to bumper **(2)** as shown. Always start from outboard edge and work towards the centre.
- Once fitment path is confirmed, carefully remove pinch weld **(1)** and apply super glue into the pinch weld channel.
- Carefully re-apply pinch weld **(1)** to bumper **(2)** and secure in position until glue is set from bumper.

Tools Required:

Super glue

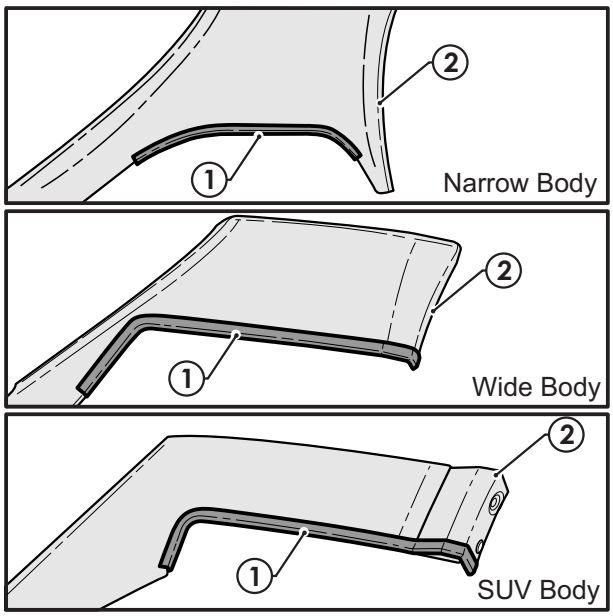

Step 20

For Pickup models:

- Refit cut bumper **(1)** to vehicle and secure with original fasteners (2 x plastic trim clips in wing area).
- refit grille **(2)** and secure with original fasteners (7 places).

For Fortuner models:

- Refit cut bumper **(1)** to vehicle and secure with original fasteners (2 x screws in wing area + 3 screws under grille area **(3)**).
- Refit grille **(2)** and secure with original fasteners (4 places).

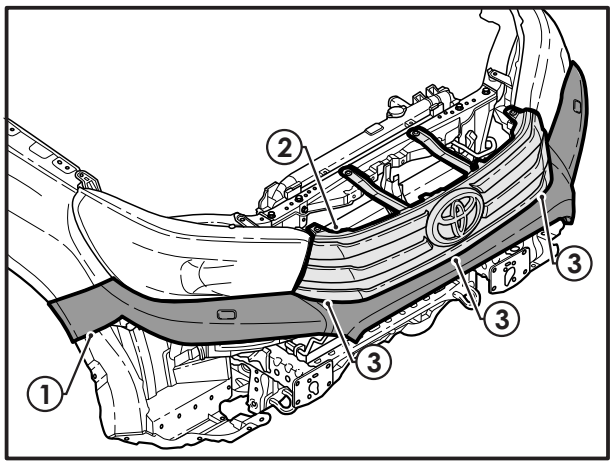

Tools Required:

10mm socket

Phillips head screwdriver

Step 21

- If fitting winch kit, prepare bullbar for fitment by continuing with Step 22, otherwise proceed to Step 30.

Note: Fasteners and brackets required for winch preparation are not supplied with the bullbar. Refer accessory part numbers on Page 4 of these instructions.

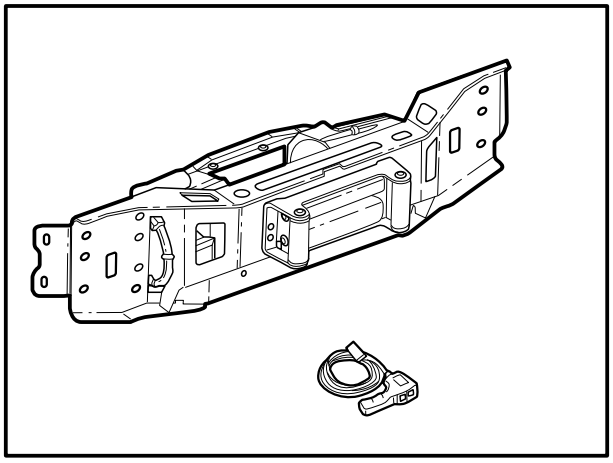

Step 22

- Remove and discard mesh grille and fir tree clips **(1)**.

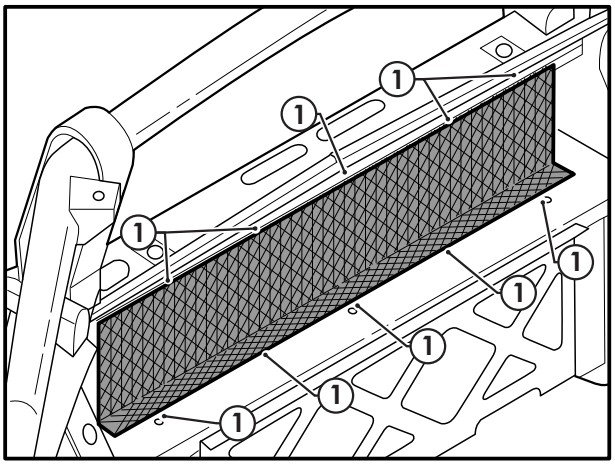

Tools Required:

Clip removal tool

Side cutters

Step 23

- Remove and discard torsion plate **(1)** and 4x M6 bolts **(2)** from bullbar.
- Remove and discard number plate cover **(3)** and 8x M6 bolts and nuts **(4)** from bullbar.

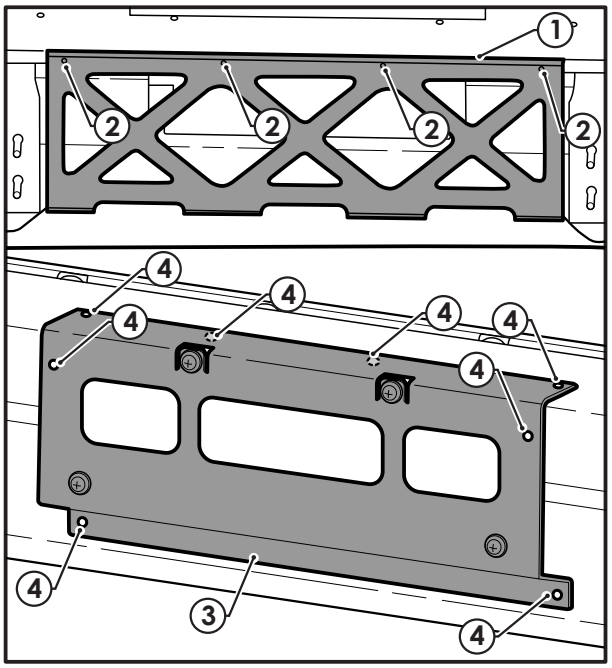

Tools Required:

10mm spanner

10mm socket

T-30 6 spline hexalobular socket bit

Step 24

If fitting to Premium bullbar, continue with Step 24, otherwise, go to Step 25.

- Apply masking tape to over rider.
- Mark and cut LH side over rider as shown.
- De-burr sharp edges.

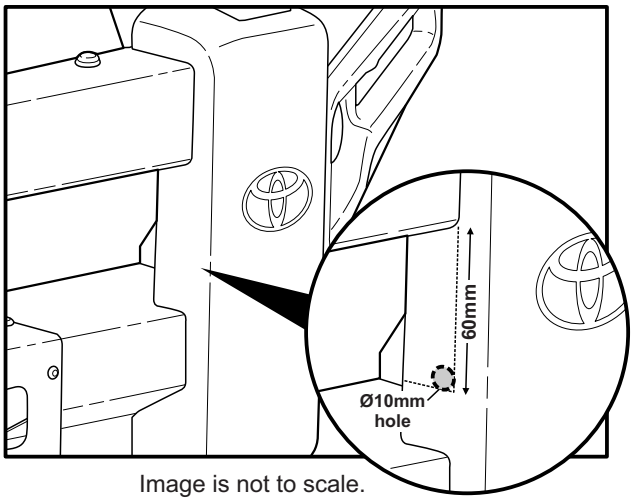

Image is not to scale.

Tools Required:

Multi tool

Ruler

Marker pen

10mm drill bit

Masking tape

Step 25

- Attach winch controller bracket **(1)** to bullbar upper pan using 2x M6 x20 bolts **(2)** and 2x M6 flanged nuts **(3)** as shown.
- **Torque to 10Nm.** ⚠

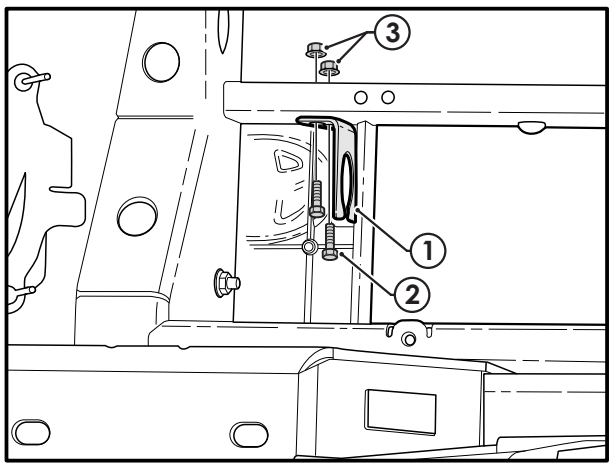

Premium bullbar shown for illustrative purposes

Tools Required:

10mm socket or spanner

T30 Hexalobular socket bit

Step 26

- Attach locking spring clips **(1)** to inside of bullbar lower pan as shown. Use 4x 3.2mm diameter rivets **(2)**.

Note: If excess powder has built up in hole, drill hole with 3.5mm bit. Cover exposed metal with anti corrosion paint.

Important

Ensure locking spring clips are seated flat against surface of Bullbar before clamping rivet.

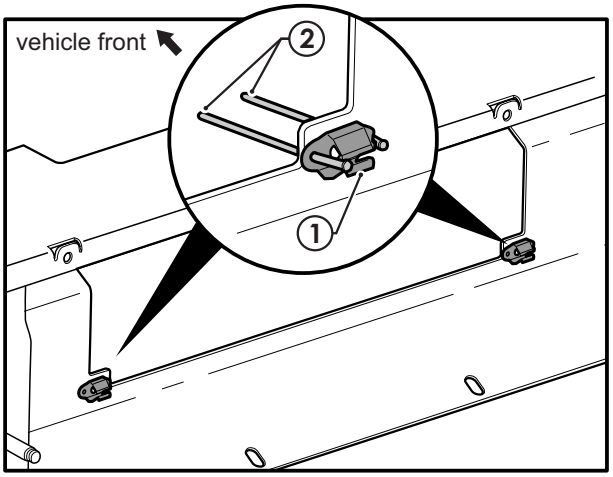

Tools Required:

Rivet gun

3.5mm drill bit and drill (if required)

Step 27

- Attach replacement winch cover **(1)** with 2 x black hinges **(2)** supplied and 8x M4x16mm Button Head Socket Screws **(3)** and 8xM4 flanged nuts **(4)**.
- **Torque to 3Nm.** ⚠

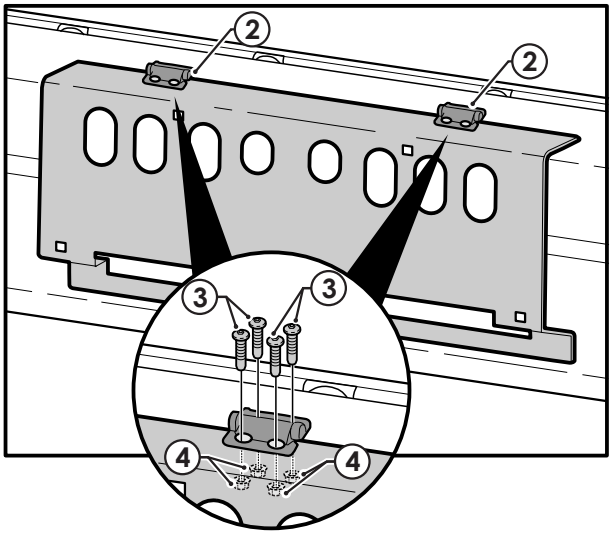

Tools Required:

T20 6 spline hexalobular socket

Torque wrench

7mm spanner

Step 28

- Attach locking pin **(1)** to winch cover **(2)** as shown. Secure in place with santoprene lock washer **(3).**

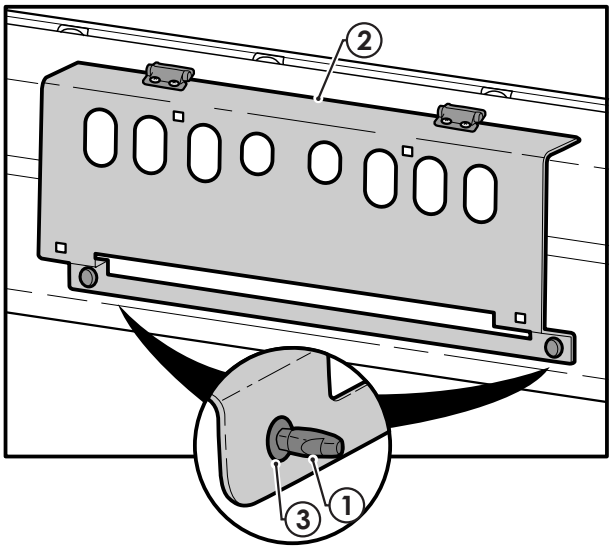

Step 29

- Check function of quarter turn latches **(1)** by ensuring they lock winch cover closed.
- Check function of winch cover. Cover should remain open when in the up position .

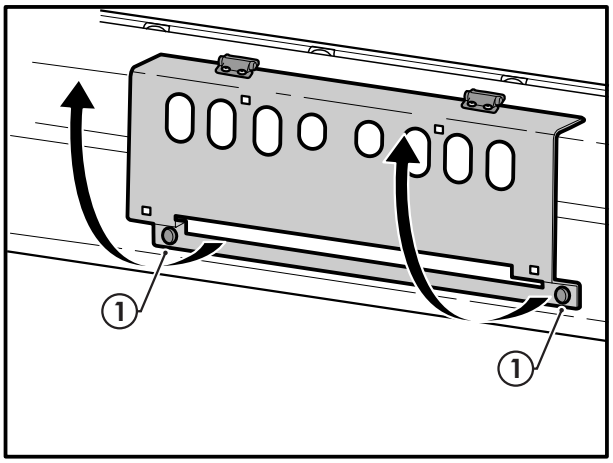

Step 30

If fitting fog lamp continue with Step 30, otherwise proceed to Step 33.

- Cut LH plastic bezels **(1)** from fog light housing **(2)**.
- Use knife or small file to clean cut edge.

Important

Take care when using knife. Always cut away from body and use protective gloves to prevent injury.

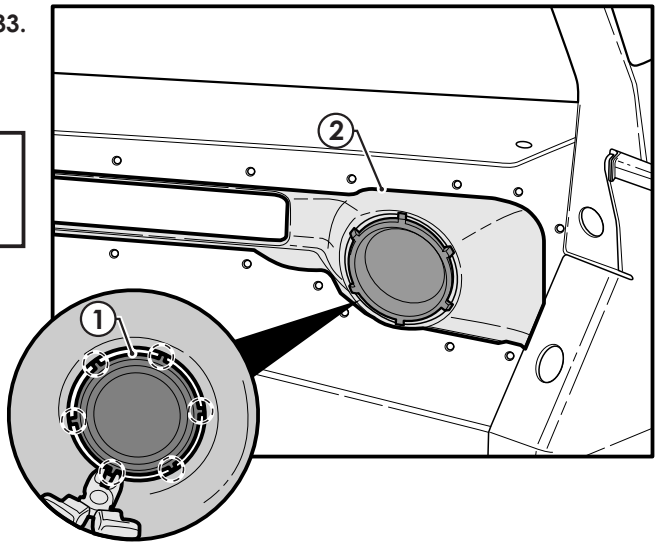

Tools Required:

Side cutters

Sharp knife

File

Step 31

- Secure fog lamp bracket **(1)** to the wing **(2)** with 4x4.8mm rivets **(3)** per side.

Note: If excess powder has built up in hole, drill hole with 5mm bit. Cover exposed metal with anti corrosion paint.

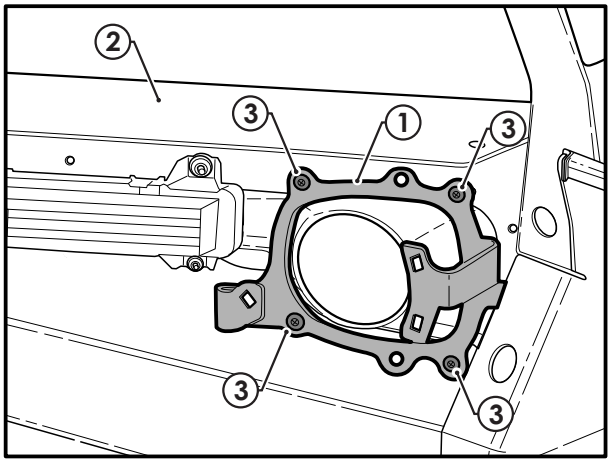

Tools Required:

Rivet gun

5mm drill bit and drill (if required)

Step 32

- Insert three grommets **(1)** into fog lamp bracket **(2)** and attach OE fog lamp **(3)** using 3x self tapping #8x3/4" mm long screws **(4)** supplied.
- Tighten screw to just clamped condition. Do not over tighten as plastic housing may crack.
- Attach fog lamp extension harness to OE fog lamp **(5)**.

Repeat Steps 30 to 32 for RH side.

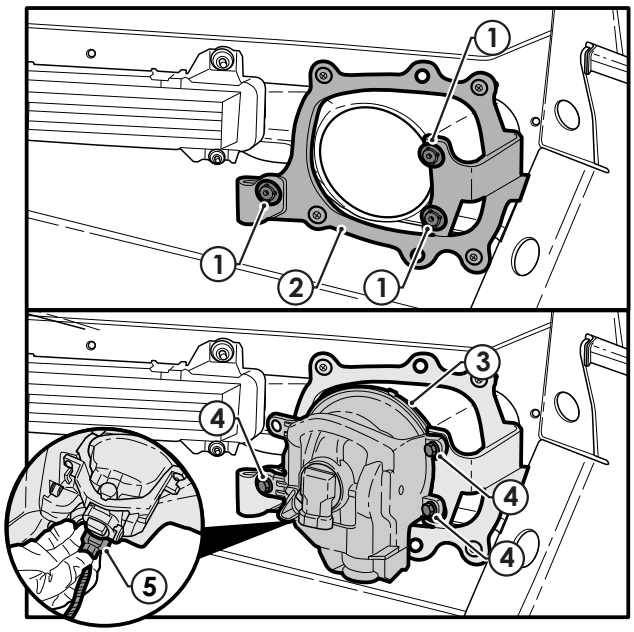

Tools Required:

Phillips head screwdriver

Step 33

If fitting driving lamps, continue with Step 33 otherwise proceed to Step 35.

- Fit driving light **(1)** by referring to the driving light instructions.
- Remove and discard upper M10 bolts **(2)** and nuts **(3)**.
- Ensure lights are torqued prior to bullbar fitment

Note: **Caution, wear gloves and take care when fitting driving lamp.**

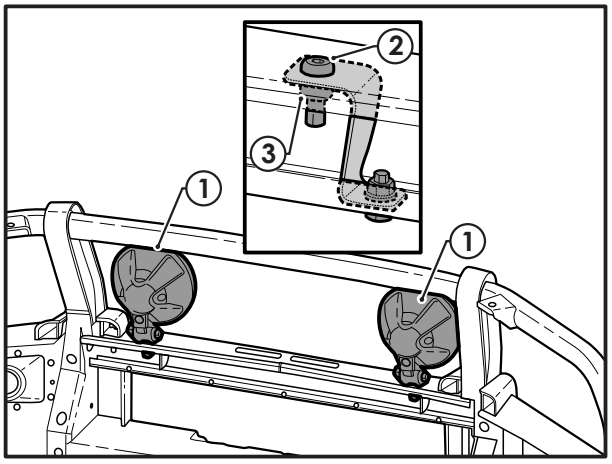

Tools Required:

6mm allen key

15mm 3/8 inch drive deep socket

Step 34

If fitting winch, continue with Step 34, otherwise proceed to Step 35.

- Refer to the winch instructions for additional steps related to the LH chassis gusset fitment.
- Fit RH chassis gusset as per Step 35.

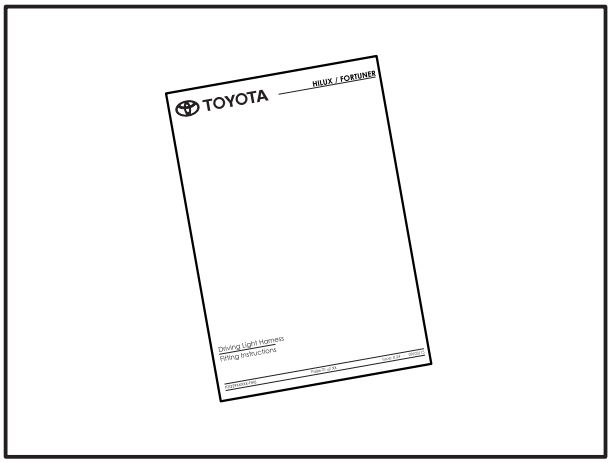

Step 35

- Insert inboard nut plate **(1)** through end of chassis (RH) **(2)**. Ensure correct orientation as shown
- Loosely attach inboard chassis gusset **(3)** with 2mm shim **(4)** using 2x M12x35mm flanged bolt **(5)** and M12 Washer x2 **(6)** as shown.
- Repeat for LH chassis gusset - additional steps required with winch

Important

Ensure correct orientation of chassis gusset and nut plate.

Tools Required:

15mm socket/spanner

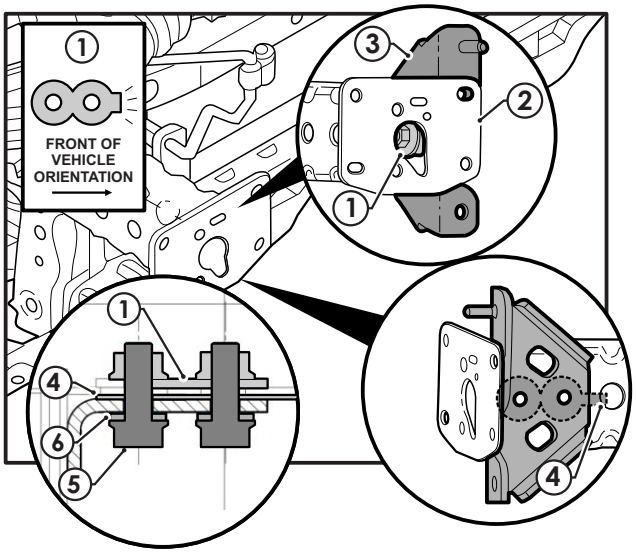

Right hand side shown for illustrative purposes

Step 36

- Hand tighten 2x M12x35mm flanged bolts **(1)**.
- Check alignment of chassis gusset relative to RH chassis end plate holes **(2)** and add/remove shims as necessary (refer to Step 35 item 4).
- Temporarily secure M10 x 35 or 40mm flanged bolt and nut **(3)** to ensure gusset is pulled flush to chassis end plate.
- **Torque 2x M12x35mm flange head bolts (1) to 77Nm.⚠**
- Remove M10 bolt and nut **(3)**.
- **Repeat for the LH side.**

Tools Required:

17mm socket (if fitting winch)

13mm or 14mm socket 15mm socket

14mm spanner Torque wrench

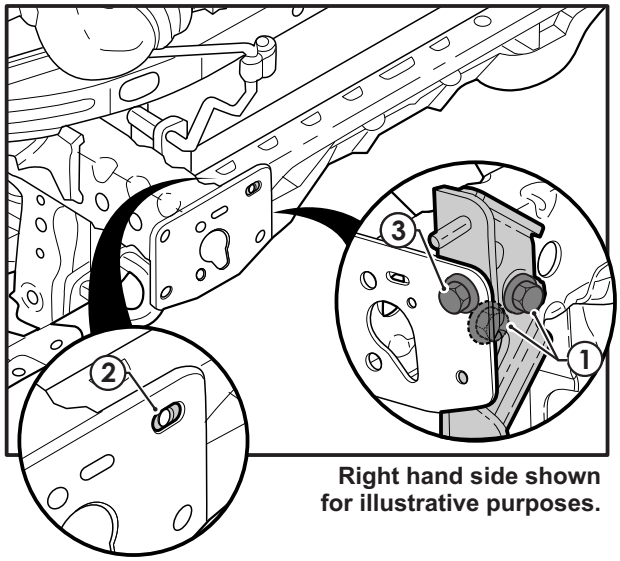

Right hand side shown for illustrative purposes.

Step 37

- Loosely fit outboard RH chassis gusset **(1)** and RH rear wing brace **(2)** to chassis using M12x45mm bolt **(3)**. Fit 1mm shim **(4)** at lower rear hole between chassis gusset **(1)** and chassis **(5)** and secure with M12 x 35mm **(6)** bolts.
- **Repeat for the LH side.**

Tools Required:

15mm socket

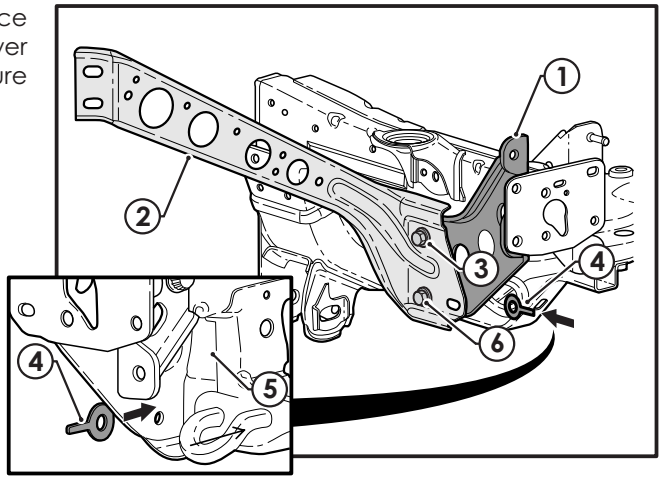

Right hand side shown for illustrative purposes.

Step 38

- Hand tighten RH 2x M12 bolts **(1)**.
- Check alignment of chassis gusset **(2)** relative to chassis end plate **(3)** and add/remove shims as necessary at both M12 joints **(1)**.
- Temporarily secure M10 x 35 or 40mm flanged bolt and nut **(4)** to ensure gusset is pulled flush to chassis end plate.
- Fit M10 x 35 or 40mm bolt **(5)**, M10 x25mm OD 4mm thick washer **(6)** and M10 nut **(7)** as shown
- **Torque 2 x M12 bolts (1) to 77Nm.** ⚠
- **Torque 1 x M10 bolt (5) to 70Nm.** ⚠
- Remove temporary M10 bolt **(4)** and nut.
- **Repeat for the LH side.**

Important

Ensure no air gaps between chassis gusset and chassis end plate.

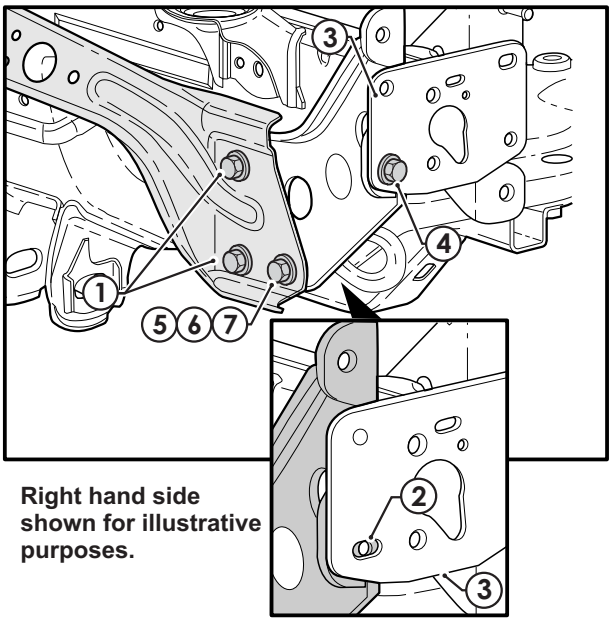

Right hand side shown for illustrative purposes.

Tools Required:

13mm or 14mm socket
15mm socket
14mm open end spanner
Torque wrench

Step 39

Open the Undercover Fitting Kit.

- Assemble U-nut **(1)** to undercover attachment bracket **(2)**.
- Attach undercover attachment bracket **(2)** to driver side wing brace **(3)** with M6x20mm torx head bolt **(4)** washer **(5)** and nut **(6)** as shown. Align bottom holes **(7)** to achieve correct position and use phillips head screw driver to stop rotation while tightening.
- **Torque M6 bolt to 10Nm.** ⚠

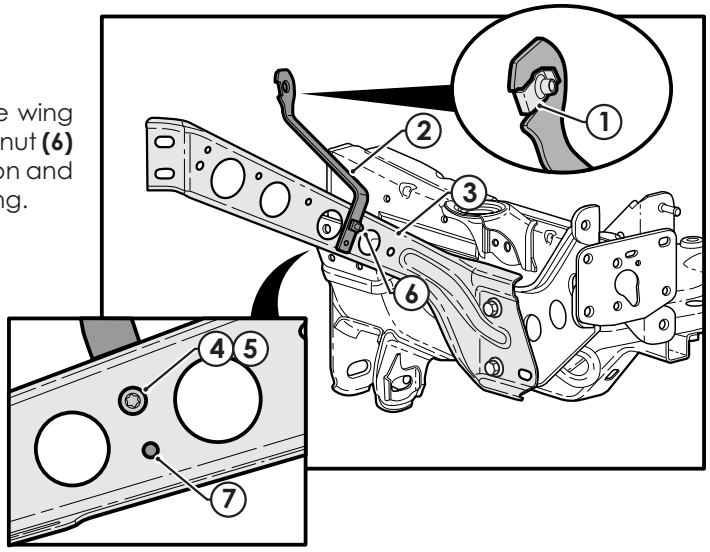

Tools Required:

T-30 6 spline Hexalobular socket bit
Torque wrench
Phillips head screw driver

Step 40

If fitting winch, continue with Step 40, otherwise proceed to Step 43.

- Assemble winch and cradle as per accessory fitting instructions .
- Assemble winch cradle assembly & crash box to vehicle as per accessory fitting instructions.
- Route all cables and solenoid as per accessory fitting instructions.

Note: Refer to part numbers at the front of the instructions.

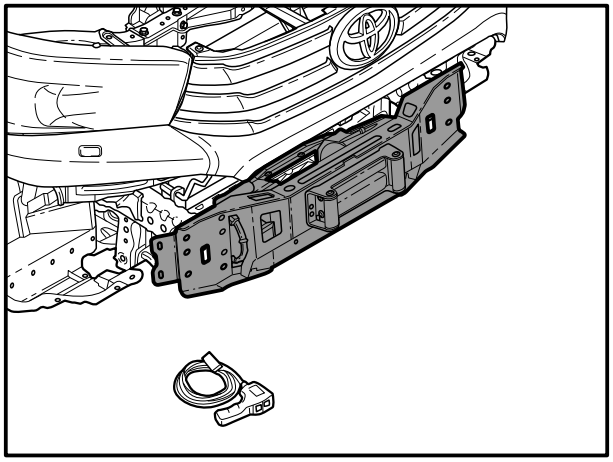

Tools Required:

Refer accessory fitting instructions

Step 41

- Position bullbar on the ground in front of vehicle.
- Connect the winch controller plug **(1)** to the steel bracket **(2)** inside the LH over rider area using 4 x self tapping screws and plastic clip supplied with winch.
- **Torque to 0.8Nm.** ⚠

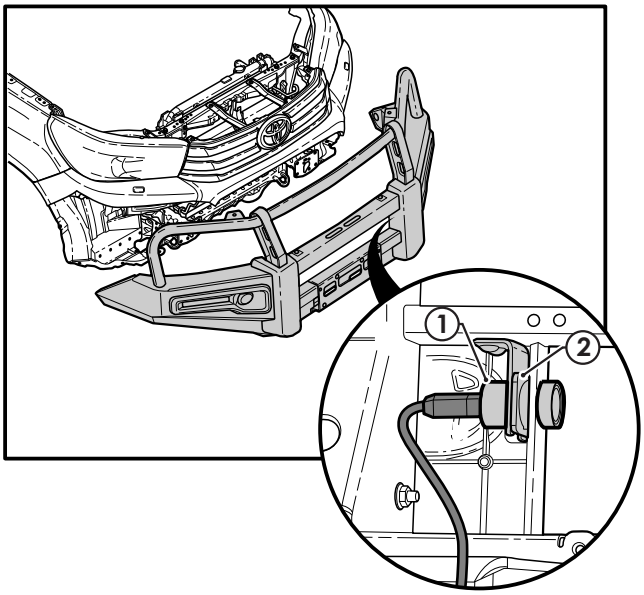

Tools Required:

Small Phillips head screw driver

Torque wrench

Step 42

- Attach winch grille **(1)** to bulbar using 2x fir tree clips **(2)**, 3x 200mm Cable Ties **(3)**, 3x M6x20 torx head bolts **(4)** and M6 flanged nuts **(5)** supplied in winch adaptor kit as shown.
- Secure winch plug cap tether **(6)** to bullbar with M6x20 torx head bolts **(4)** M6 flanged nut **(5)**.
- **Torque all M6 bolts to 10Nm.** ⚠

Proceed to Step 46.

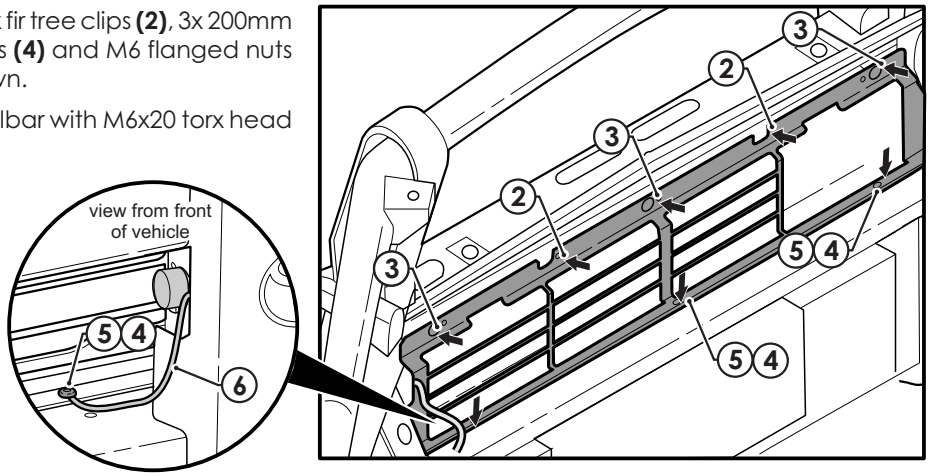

Tools Required:

T-30 6 spline Hexalobular socket bit

Torque wrench

Step 43

If fitting to Premium Bullbar continue with 43, otherwise proceed to Step 44:

- Offer RH wing brace mount **(1)** and crash box **(2)** to the chassis end plate and loosely secure with 7 fasteners **(3)** as shown. Hand tighten only. Do not over tighten to allow vertical bulbar adjustment.
- Refer to Step 45 for fastener arrangement and crash box.

Repeat for LH wing brace plate and crash box.

Proceed to Step 45.

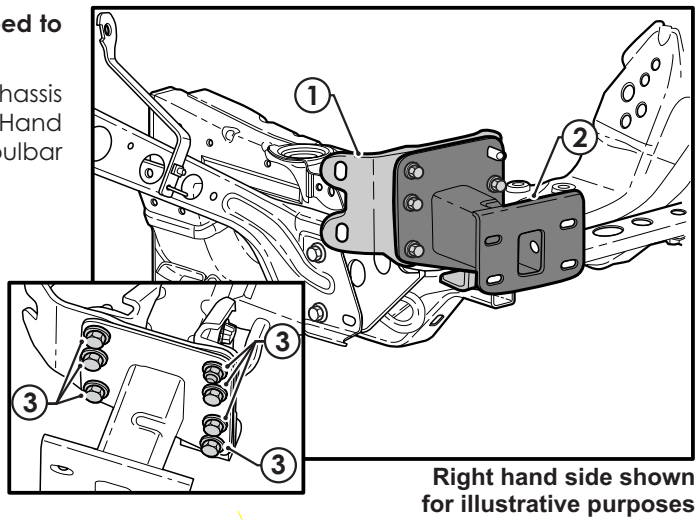

Right hand side shown for illustrative purposes

Tools Required:

NA - Hand tighten only

Step 44

This Step is only for commercial models.

- Offer wing brace mount **(1)** and crash boxes **(2)** to the chassis end plate and loosely secure with 14 fasteners **(3)** as shown. Hand tighten only. Do not over tighten to allow vertical bulbar adjustment.
- Refer to Step 45 fastener for arrangement.

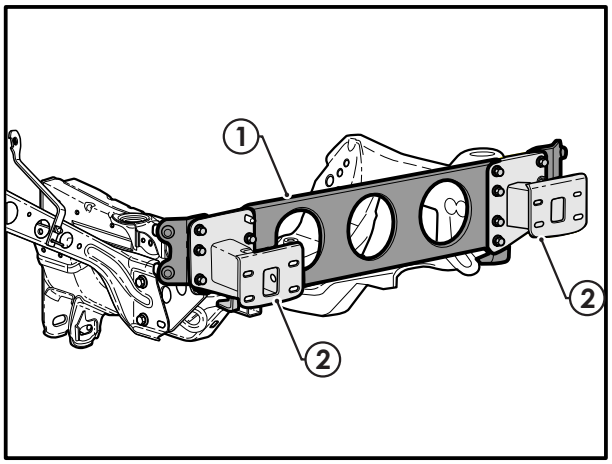

Vehicle parts not shown for illustrative purposes

Tools Required:

NA - Hand tighten only

Step 45

- Fastener arrangement for chassis gussets (per side)
- 6 x M10 x 35 or 40mm flanged bolt **(A)**.
- 7 x M10 x25mm OD x 4mm thick washer **(B)**.
- 5 x M10 nut (flanged) **(C)**.

Important

Ensure correct orientation of fasteners.

Tools Required:

13mm or14mm socket

14mm spanner

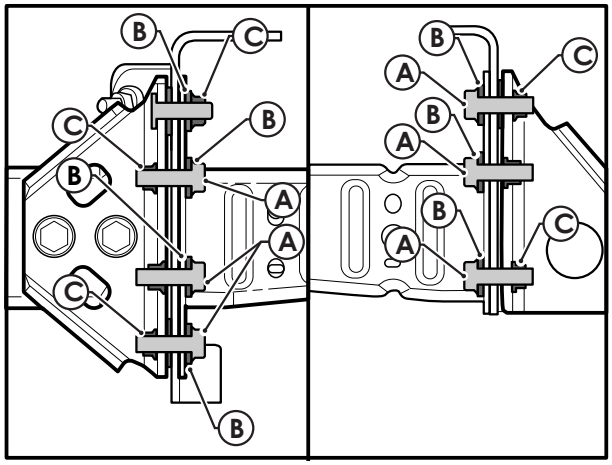

INBOARD OUTBOARD

Step 46

- Uncoil wiring harness in preparation for installation.
- Fit 5mm spacer **(1)** over bulbar weld studs.
- With assistance, offer bulbar **(2)** to crash box **(3)** and loosely secure with 8 x M10 hardened washers **(4)** and 8 x M10 flanged nuts **(5)**.
- Tighten nuts until bulbar **(2)** is sitting flush with crash box mount face. Do not over tighten to allow lateral bulbar adjustment.

Important

Two person lift. Request assistance when lifting.
Ensure wiring harness is not trapped in between bullbar and vehicle mating parts when installing.

Tools Required:

14mm deep socket

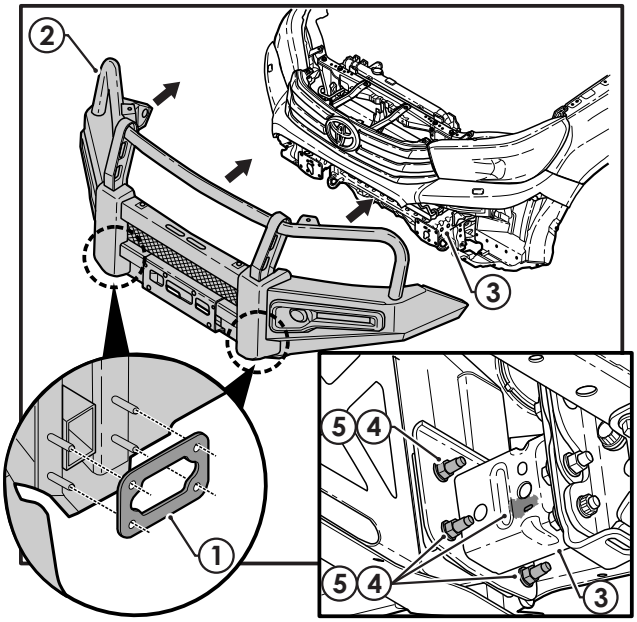

Step 47

- Adjust bullbar across car until central by measuring from fixed point on vehicle bumper to bullbar **(1)**.
- Tighten 2 x diagonal nuts **(2)** on each side.

Important

Apply masking tape or similar to steel rule to ensure no damage to paint.

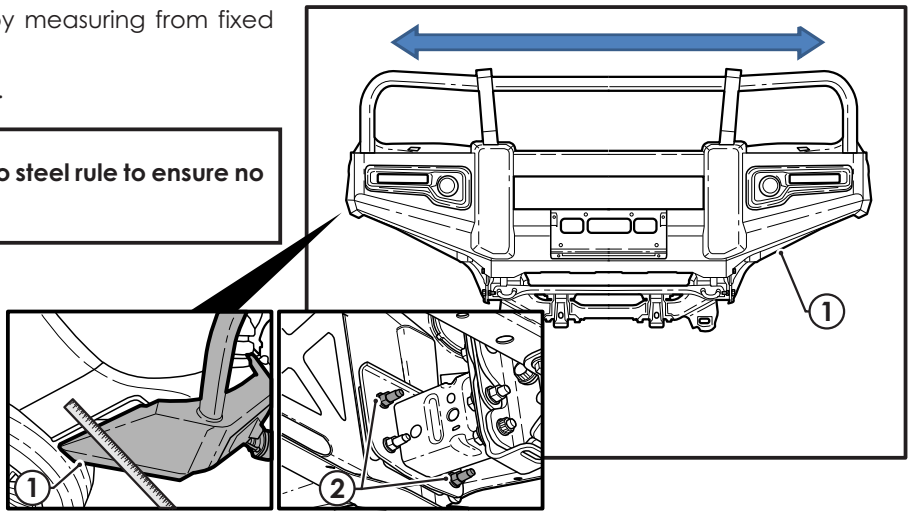

Tools Required:

Steel ruler

14mm deep socket

Step 48

Adjust bullbar height until following conditions are met:

1. Wheel arch aligns as per image for pick-up **(1)** and Fortuner models **(2)**.
2. Gap measured from vehicle bumper to bullbar conforms to limits shown in Step 49.
3. Tighten 2x diagonal bolts **(3)** on each side of each crash box rear flange.

Important

Important: If gap condition cannot be achieved continue to Step 50, otherwise proceed to Step 51.

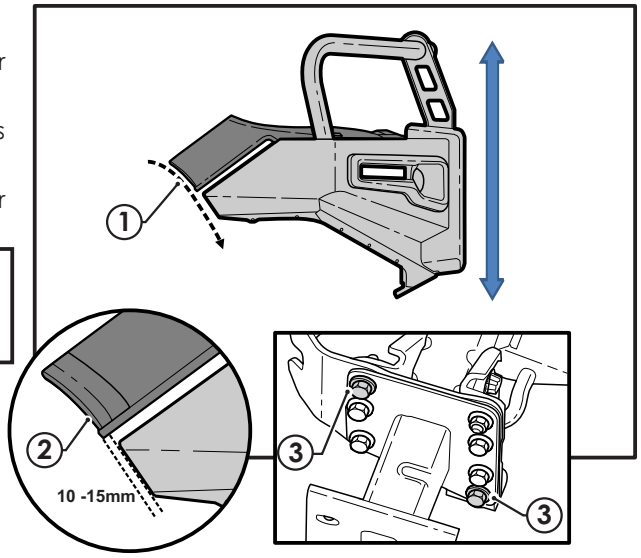

Step 49

Confirm bulbar gap/Fitment.

- Gap between bumper join and bullbar **(1)** is:
- Hilux: Greater than 128mm.
- Fortuner: Greater than 108mm.
- Confirm gap between bumper and bullbar is greater than 15mm between uprights **(2)**.
- Confirm gap between bumper and bullbar is between 15 and 30mm along the horizontal wing edge **(3)**.

Important

Apply masking tape or similar to steel rule to ensure no damage to paint.

Tools Required:

13mm or 14mm socket

14mm spanner

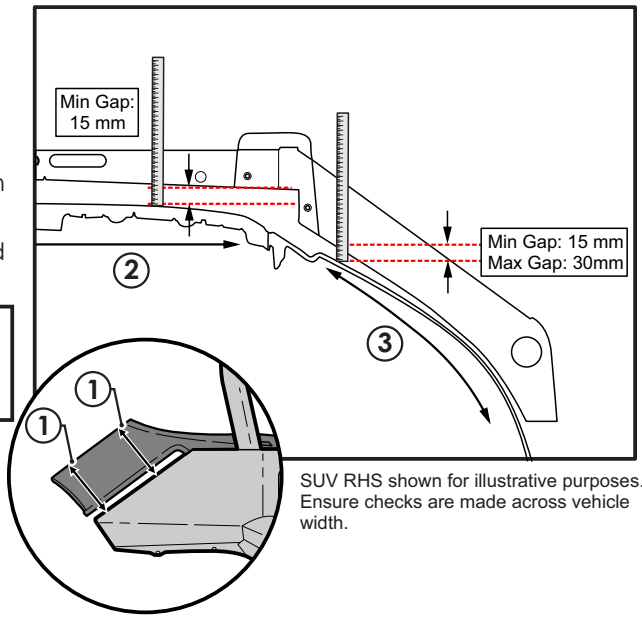

SUV RHS shown for illustrative purposes. Ensure checks are made across vehicle width.

Step 50

If gap condition was not achieved in Step 48 or 49, continue with Step 50, otherwise proceed to step 51.

- With assistance, carefully remove bulbar by removing flanged nuts and washers assembled in Step 47.
- If gap measured in Step 48/49 was too small, add 2.5mm shim to bulbar weld studs
- If gap measured in Step 48/49 was too big and winch is not fitted, remove 5mm shim and replace with 2.5mm shim to bulbar weld studs

Repeat Steps 46 to 49 for bulbar fitment.

Important

Max shim condition: 10mm.
Min shim condition with winch: 5mm.
Min shim condition without winch: 0mm.

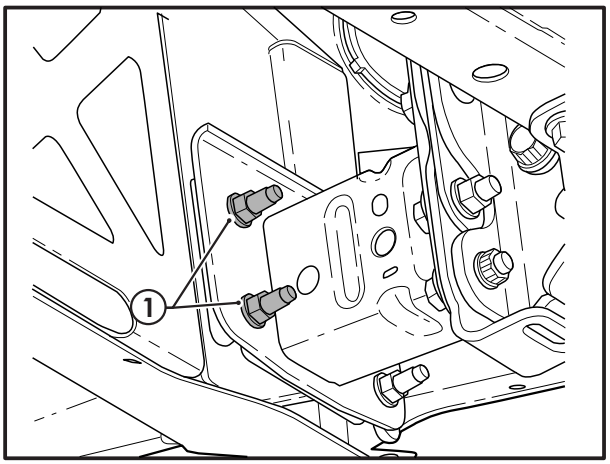

Step 51

- Loosely attach RH front wing brace **(1)** between wing brace plate/winch cradle **(2)** and bullbar wing attachment bracket **(3)** using M10 x 35 or 40mm flanged bolt **(4)**, M10 x 4mm x25mm OD thick washer **(5)** and M10 flanged nut **(6)** in four locations as shown.
- Push wing brace upwards when tightening bolts to maximise gap to undercovers.
- Repeat for LH wing brace.

Note: Bullbar wing not shown in image.

Important

Ensure correct orientation of wing brace and fasteners as shown.

Tools Required:

NA - Hand tighten only

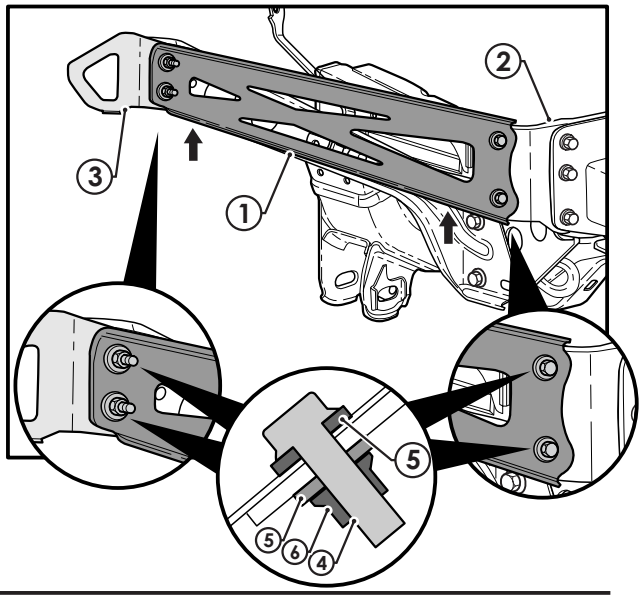

Step 52

- **Torque all M10 flanged head bolts and nuts to 70Nm in the following sequence:⚠**

1. Chassis gusset to crash box (seven places per side).
2. Crash box to bullbar (four places per side).
3. Winch cradle/ wing attachment bracket to front wing brace (two places per side).
4. Wing brace to wing brace bracket (two places per side).

Important

Do not use a rattle gun.

Tools Required:

13mm or 14mm deep socket

14mm spanner

Torque wrench

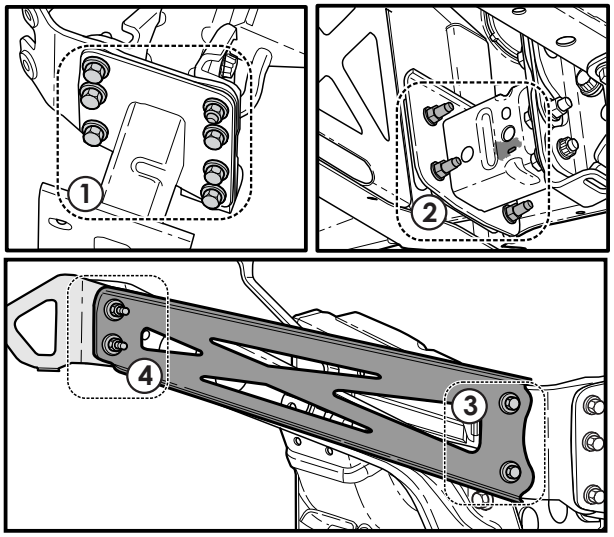

Step 53

- Ensure adequate overlap between bumper **(1)** and fender liner to allow fir tree clip to grip both parts.
- In RH wheel arch area, drill 5mm hole **(4)** through bumper **(1)** and fender liner **(2)** and fit Fir tree clip **(3)** to secure (use drill stop to limit depth to ensure no damage).
- Repeat for LH wheel arch.

Note: For narrow body models, push the bumper inward to ensure the same gap on the LH.

Tools Required:

5mm drill

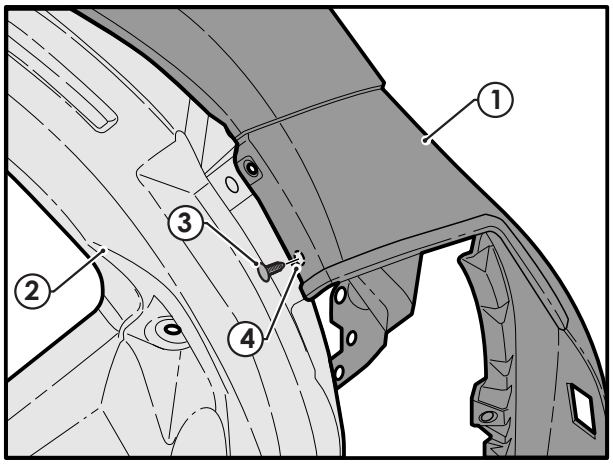

Bullbar not shown for illustration purposes.

Step 54

Complete installation of main bullbar wiring harnesses to vehicle:

- Route the LH Indicator patch **(1)**, Earth ring terminal **(2)** & Power wires **(3)** underneath the LH Vehicle Head Lamp cavity.
- For high grade pickup indicator patch is routed in apron cavity outboard of the headlamp.
- Repeat for RH Indicator patch.

Note: For commercial harness power branch (3) is not present.

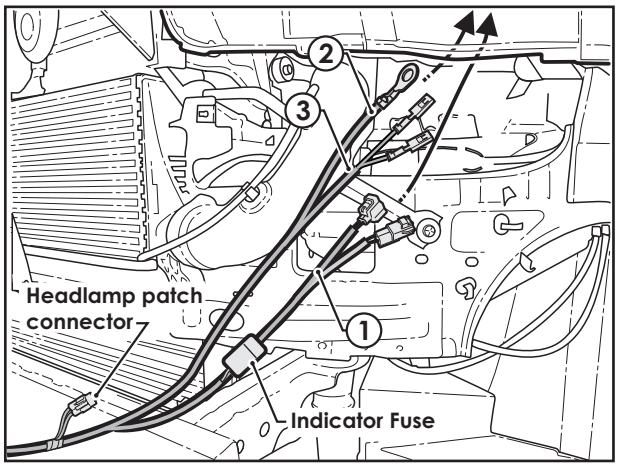

Step 55

- Feed the Orange and Orange/Black Power wire terminals **(1)** and White wire ring terminal **(2)** around the sides of the battery, following the vehicle harness.
- Cable tie the harness to the vehicle harness every 200mm.

Note: For commercial no power wire terminal is fitted (1).

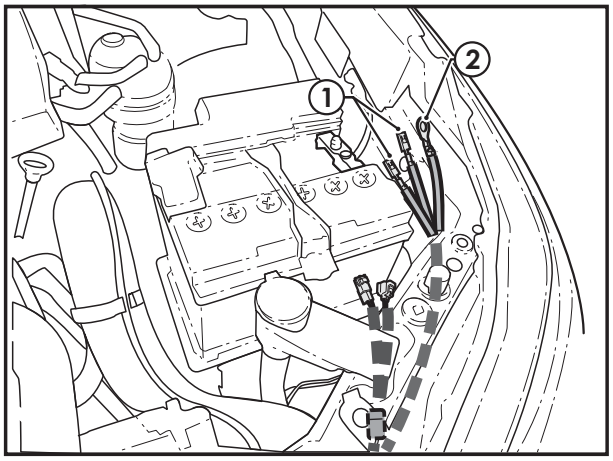

Step 56

For non commercial only. For commercial proceed to Step 58.

- Remove the accessory fuse block cover **(1)**.
- Disconnect the accessory fuse block **(2)** from its mounting bracket **(3)**.
- Using side cutters, remove and discard the cable tie **(4)** from the wire bundle.
- Unclip and dislodge the fuse holder **(5)**.

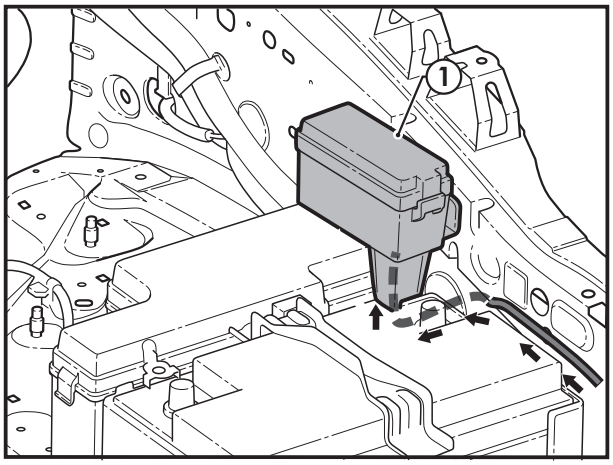

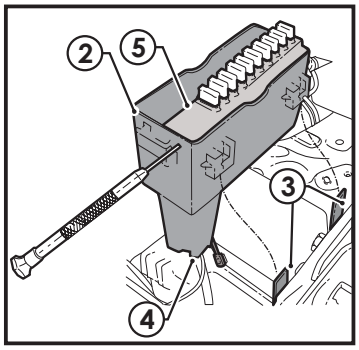

Step 57

- Feed the Bullbar harness Orange and Orange/Black terminal wires through the fuse block funnel.
- Insert the **Orange** wire fuse terminal **(1)** into the cavity **3** as shown.
- Insert the **Orange/Black** wire fuse terminal **(2)** into the cavity **7** as shown.

Important

Ensure audible "Click" is heard.

- Insert the supplied 2A mini blade fuses **(3)** into the wired slots and re-fit back into the accessory fuse box **(4)**.

Important

Check Fuse Terminal retention.

- Secure cables with Cable tie **(5)** where shown.
- Replace accessory fuse box onto it's mounting bracket.

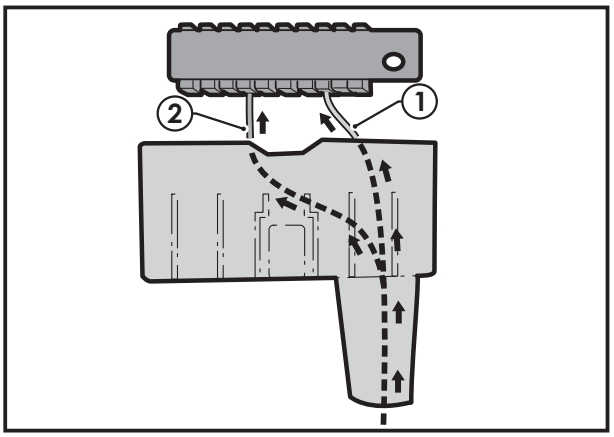

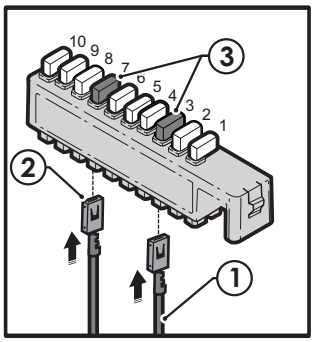

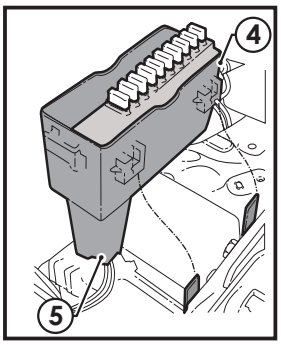

Fuse Holder 1 LHS	1	2	3 Bull Bar 2A	4	5	6	7 Bull Bar 2 2A	8	9	10
Fuse Holder 2 RHS										

Step 58

Note: Dislodge and move battery to gain access to M6 earth bolt at junction connectors on fender.

- Using the existing M6 earth bolt **(1)**, fasten white wire ring terminal **(2)** to the vehicle body.

Important

Earth Bolt Torque to be between 6.9 ~ 9.8 Nm.

- Relocate battery to original location & fasten.

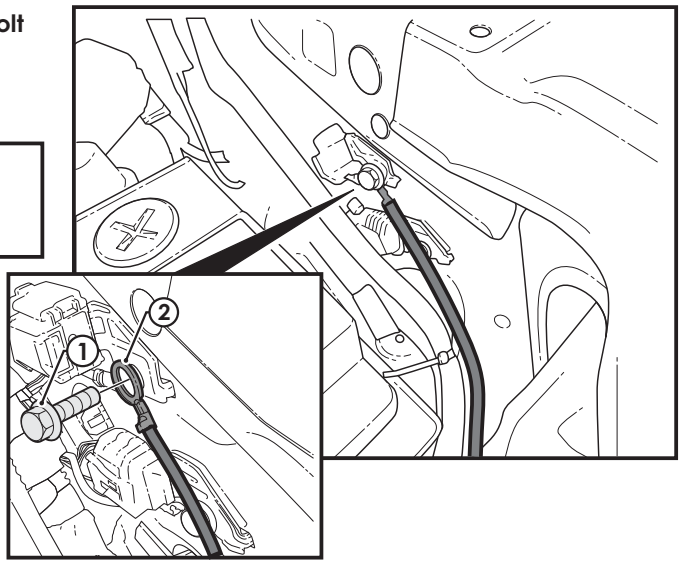

Step 59

- At the rear of the LH Headlamp area, locate and disconnect the LH Vehicle Headlamp connector **(1)** that contains the Position Lamp circuit.
- Connect the Position Lamp Harness Patch connectors **(2)** in-between the vehicle harness and Lamp connectors **(1)**.

NOTE: Position Lamp Connectors will differ depending on Vehicle Headlamp.

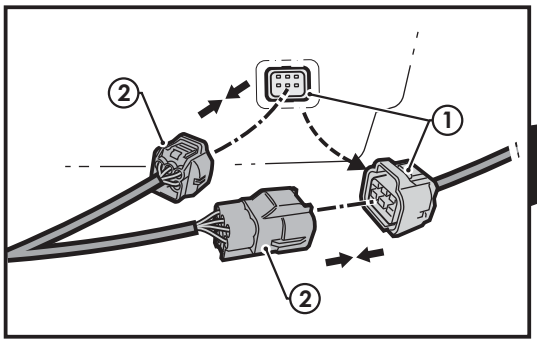

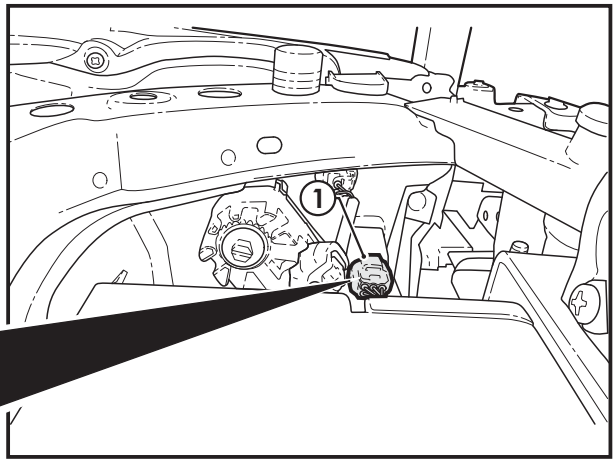

Step 60

For non commercial only. For commercial proceed to Step 61.

- Connect the Position lamp harness 4-Way male connector **(1)** to the Bullbar harness 4-Way female connector **(2)**.

Note: 4-Way Headlamp Position Connector location is shown in Step 2.

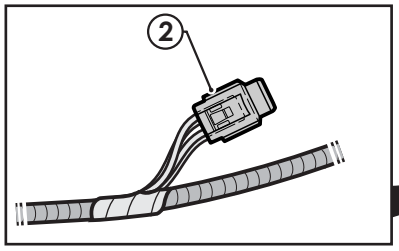

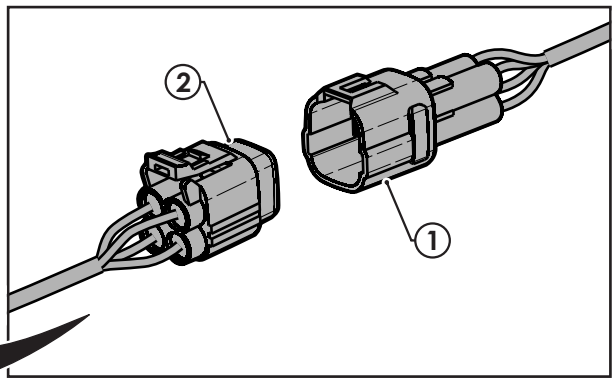

Step 61

- Locate and disconnect the LH Indicator lamp connector **(1)**.
- Tip: on high grade Pick Up, remove indicator globe & housing to gain access to connector (quarter turn to remove).
- Route the Indicator patch above the wing brace and into the space behind the Indicator lamp.
- Connect the Main Bullbar harness LH Indicator patch **(2)** in-between the vehicle harness and Lamp connector.
- Secure Bullbar Harness to vehicle harness every 200mm, avoiding sharp edges.

Important

Use Cable Ties to ensure that connectors and fuse holders are secured.

- Repeat (indicator Patch Step) for RH Indicator connector patch.

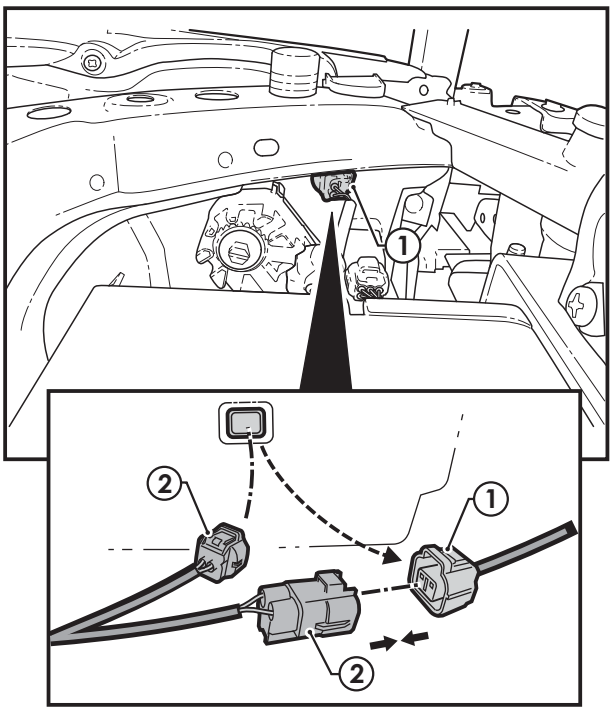

Step 62

- From underneath the vehicle, cable tie the RH Indicator harness **(1)** to the vehicle harness.
- Secure Bullbar Harness to vehicle harness every 200mm, avoiding sharp edges.

Important

Ensure harness is routed away from sharp edges.

Important

Use Cable Ties to ensure that connectors and fuse holders are secured.

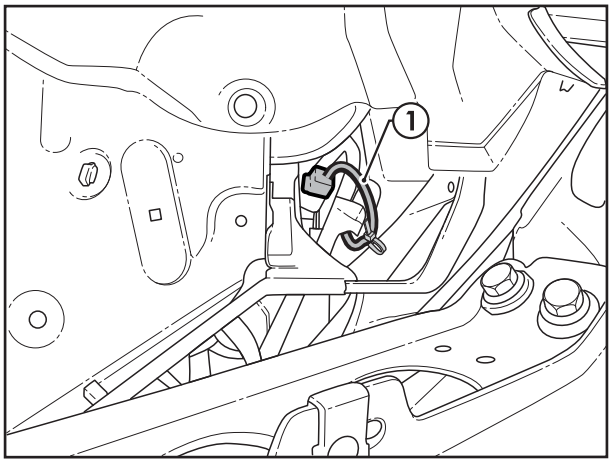

Step 63

- From underneath the vehicle, cable tie the LH Indicator harness **(1)** to the vehicle harness.
- Secure Bullbar Harness to vehicle harness every 200mm, avoiding sharp edges.

Important

Ensure harness is routed away from sharp edges.

Important

Use Cable Ties to ensure that connectors and fuse holders are secured.

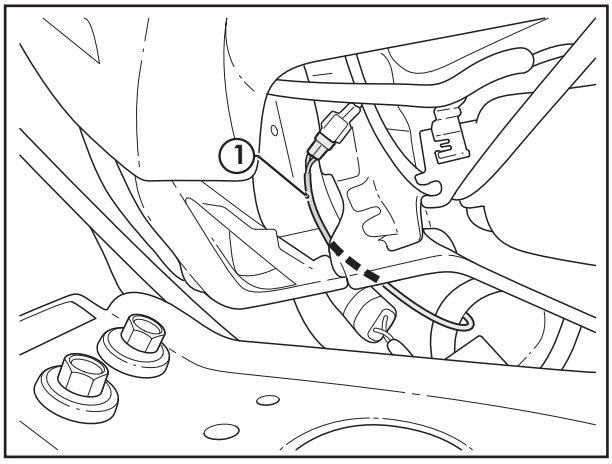

Step 64

Important	
⚠	**Reconnect negative battery terminal for system testing.**

- Check for correct functionality of the Bullbar Indicator and Position lamp system :

- Turn vehicle ignition ON. If vehicle is equipped with DRL's and they are ON, Bullbar Lamp DRL's should also turn ON.

NOTE: Vehicle DRL's will only turn ON when headlamp switch is set to auto, position lamps and headlamps are off with vehicle in direct sunlight.

- Turn vehicle position lamps ON. Bullbar DRL's should DIM (DRL not applicable to Commercial).
- Turn LH vehicle indicator ON. LH Bullbar Indicator should also turn ON (flash) and LH Bullbar DRL should DIM (DRL not applicable to Commercial).
- Turn RH vehicle indicator ON. RH Bullbar Indicator should also turn ON (flash) and RH Bullbar DRL should DIM (DRL not applicable to Commercial).
- Turn vehicle hazards ON. Both Bullbar indicators should turn ON (flash) and both Bullbar DRL's should DIM (DRL not applicable to Commercial).
- Turn vehicle hazards & indicators off and turn OFF vehicle. All Bullbar Lamps should turn off.

Important ⚠	**Refit battery in original location and tighten Battery bracket fasteners.**
Important ⚠	**Battery Post Terminal Clamp Torque to be between 2.9 ~ 7.8 Nm.**
Important ⚠	**Earth Bolt Torque to be between 6.9 ~ 9.8 Nm.**
Important ⚠	**Refit all removed parts and secure all fasteners to the Service Manual torque specifications.**
Important ⚠	**Cable tie the Bullbar Harness to the vehicle harness every 200mm. Ensure the harness is not crushed or stretched during Bullbar Harness installation.**
Important ⚠	**Reprogram all radio stations and clock settings by referring to the vehicle's owner manual.**

Step 65

If fitting to Premium or Fortuner bullbar, continue with Step 65, otherwise for Commercial bullbar proceed to Step 66.

- Check function of electrical components:

(1) Fog lamp (if fitted).

- Connect fog lamp extension harness to OE plug and adjust lamp angle as necessary using large Phillips head screwdriver **(A)**.

(2) Winch (if fitted).

- Refer winch fitting instructions.
- Stow hook **(B)** as per winch accessory instructions.

(3) Driving lamps (if fitted).

(4) Install Antenna (if fitted) to mount provided .

Proceed to Step 67.

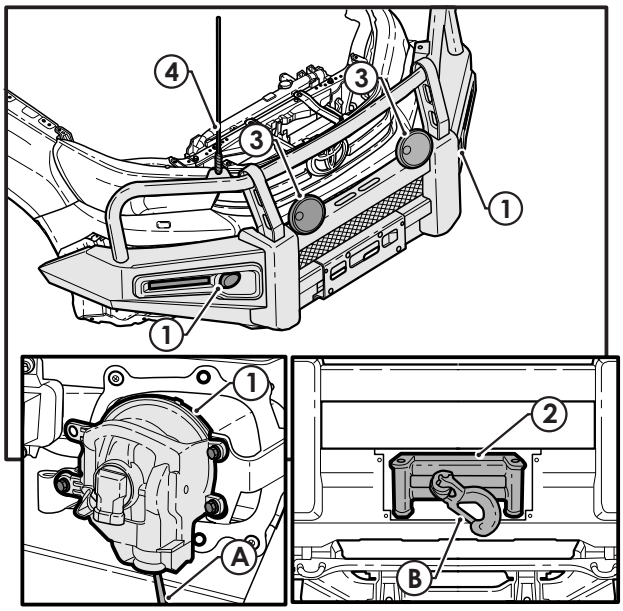

Tools Required:
Large Phillips head screwdriver

Step 66

Step 66, for Commercial bullbar only.

Check function of electrical components:

- **(1)** Winch (if fitted).
- Refer winch fitting instructions.
- Stow hook **(A)** as per winch accessory instructions.
- **(2)** Driving lamps (if fitted).
- **(3)** Install Antenna (if fitted) as per accessory fitting instructions.

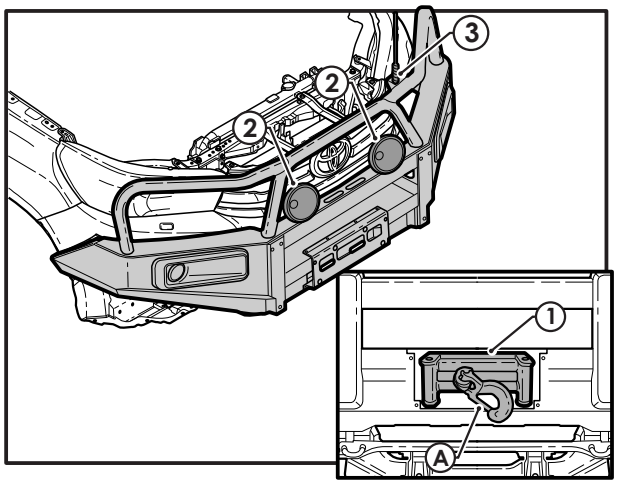

Step 67

- Attach M6 U-nut **(1)** to rear wing brace **(2)** (2 places per side).
- Attach M6 U-nut to plastic LH **(3)** and RH **(4)** splash shields (7 per side).

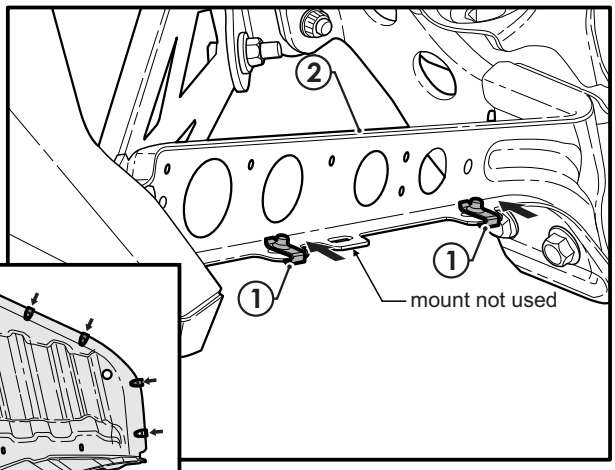

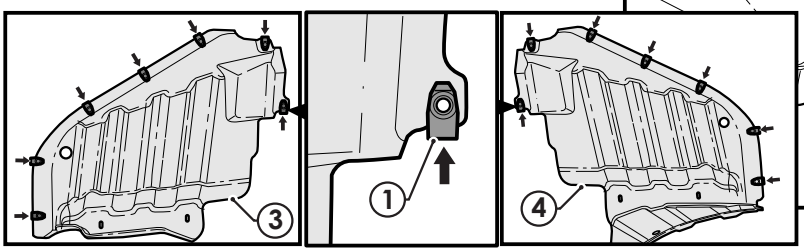

Step 68

- Position passenger side splash shield **(1)** in place and loosely secure to bullbar wing and rear wing brace with M6x20mm hexalobular head bolt **(2)** and M6x22mm OD washer **(3)** in 8 places.
- If fitting winch, cable tie harness to front wing brace. Refer winch fitting instructions before current step.

Tip: Use this hole to help align fasteners (A).

Note: Fasteners are torqued at Step 71.

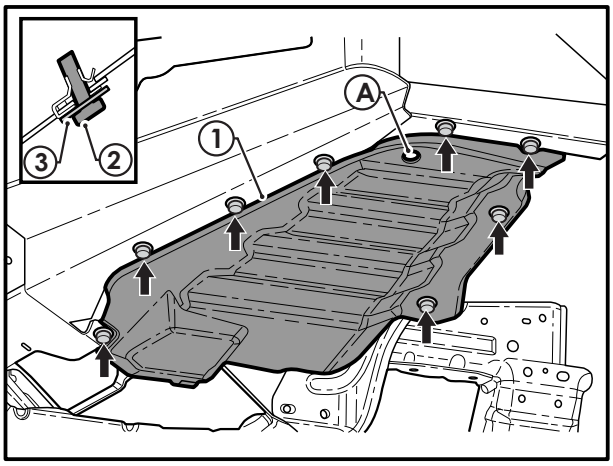

Tools Required:

T-30 6 spline hexalobular socket bit

Step 69

- Position driver side splash shield **(1)** in place and loosely secure to bullbar wing and rear wing brace with M6x20mm torx head bolt **(2)** and M6x22mm OD washer **(3)** in 8 places.
- Loosely secure undercover extension to undercover attachment bracket in wheel arch area with M6x20 bolt torx head bolt **(2)** and oversized M6x35mmOD washer **(4)**.

Tip: Use this hole to help align fasteners (A).

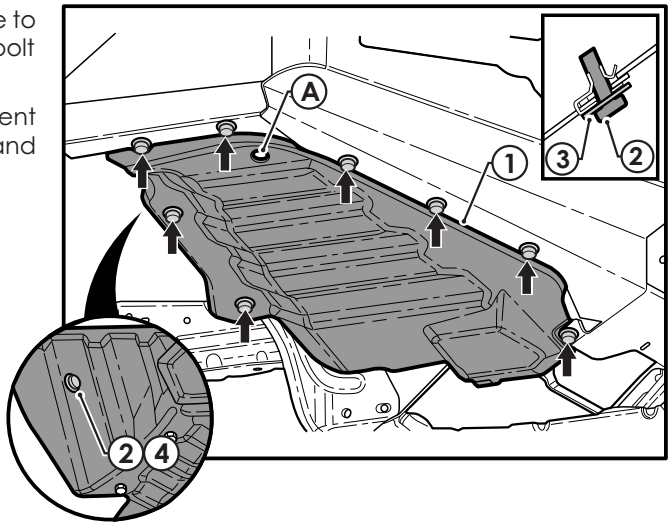

Tools Required:

T-30 6 spline Hexalobular socket bit

Step 70

- Remove and discard 2x M8 OE engine undercover fasteners **(1)**.
- Position steel undercover **(2)** in place and loosely secure as shown.

– 4 x M8 x 20mm hexalobular pan head bolt **(3)** and 4 x M8 flat washers **(4)** (if fitting winch secure with 4 M8 nuts through winch door) **(5)**.

– 2 x M8 x 30mm hexalobular pan head bolt **(6)** and 2 x M8 flat washers **(4)** and 2 x 10mm thick undercover spacers **(7)**.

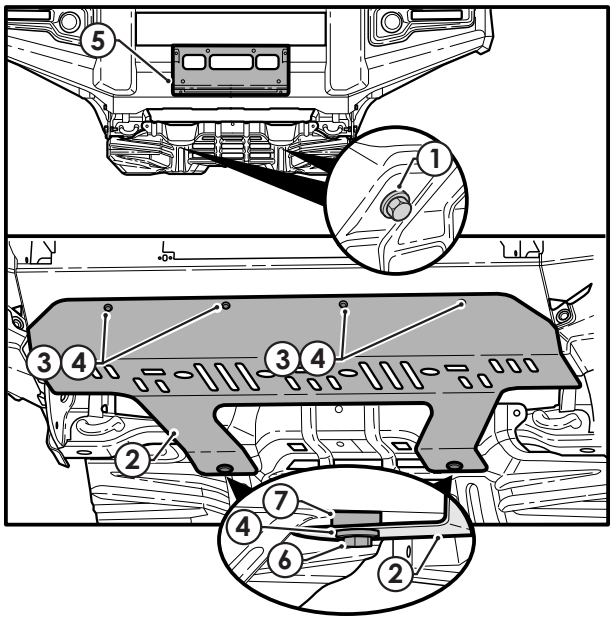

Tools Required:

12mm socket

T40 socket

Step 71

If fitting winch proceed to Step 72 otherwise continue with Step 71:

- Attach undercover **(1)** to wing brace mount attachment plate **(2)** using 1x M8 x 20mm bolts **(3)**, 1x M8 washers **(4)** and 1x M8 flanged nut **(5)** per side.
- Secure side under shield to centre under shield using 1x M6 hexalobular head bolt **(6)** and 1 x M6x 22mmOD x1.6mm thick washer **(7)** per side.
- **Torque all M6 fasteners to 5Nm.** ⚠
- **Torque all M8 fasteners to 25Nm.** ⚠

Proceed to Step 73.

Tools Required:

T-30 6 spline hexalobular socket bit

T-40 6 spline hexalobular socket bit

Torque wrench

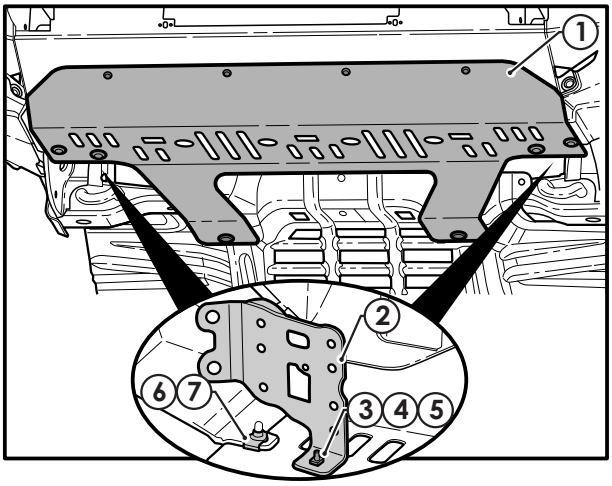

Premium wing brace mount shown

Step 72

For winch variant only:

- Attach undercover **(1)** to winch cradle **(2)** using 3x M8 x 20 torx head bolts **(3)** and 3x M8 x 65mm OD x5mm washer **(4)** (supplied with steel bullbar winch kit).
- Secure side under shield to centre under shield using 1x M6x20 torx head bolt **(5)** and 1x M6 washer **(6)** per side.
- **Torque all M6 fasteners to 5Nm.** ⚠
- **Torque all M8 fasteners to 25Nm.** ⚠

Tools Required:

T-30 6 spline Hexalobular socket bit

T-40 6 spline Hexalobular socket bit

Torque wrench

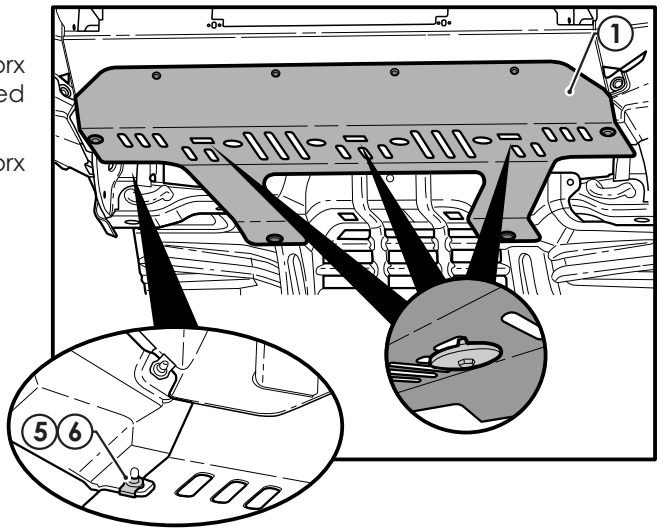

Step 73

- Re-fit plastic radiator cover **(1)**.

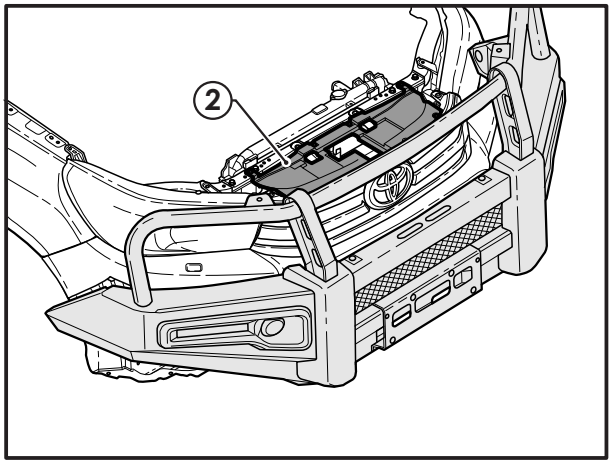

Step 74

- Fit numberplate **(1)** to bullbar by inserting plastic grommet **(2)** into square hole on numberplate mount **(3)** and securing with 4 x #10 x 19mm black screw **(4)**.

Note,

- **For slim line numberplates, secure in two places.**

Important

Note: Depending on number plate size use two or four fixation points as required.

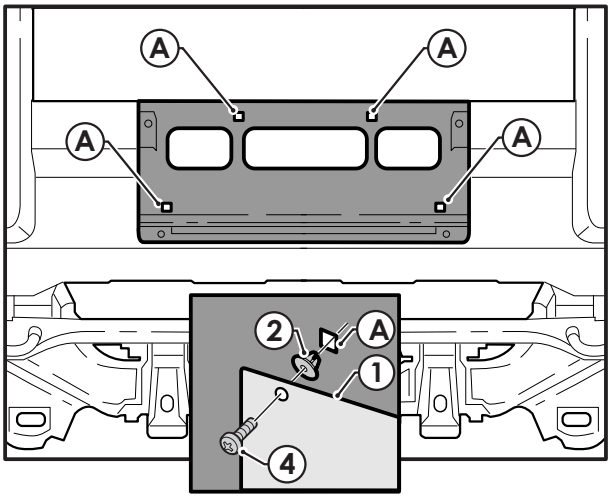

Step 75

- Complete installation checklist at the back of fitting instructions to confirm function of all electrical systems.
- Adjust driving lamps if required.
- Place fitting instructions in vehicle glove box.

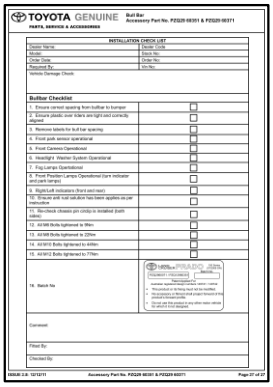

TOYOTA GENUINE PARTS, SERVICE & ACCESSORIES

Bull Bar
Accessory Part No. PZQ29-00391 & PZQ29-00371

INSTALLATION CHECK LIST

Dealer Name:	Dealer Code:
Model:	Stock No:
Order Date:	Order No:
Required By:	Vin No:
Vehicle Damage Check:	

Bullbar Checklist

1. Ensure correct spacing from bullbar to bumper	☐
2. Ensure plastic over tube's are tight and correctly aligned	☐
3. Remove labels for bull bar spacing	☐
4. Front park sensor operational	☐
5. Front Camera Operational	☐
6. Headlight Washer System Operational	☐
7. Fog Lamps Operational	☐
8. Front Position Lamps Operational (turn indicator and park lamps)	☐
9. Right Left indicators (front and rear)	☐
10. Where anti rust solution has been applies ensure dry	☐
11. Re-check chassis pin circlip is installed (both sides)	☐
12. All M8 Bolts tightened to 9Nm	☐
13. All M8 Bolts tightened to 22Nm	☐
14. All M10 Bolts tightened to 44Nm	☐
15. All M12 Bolts tightened to 77Nm	☐
16. Batch No	PRADO 150 SERIES FOR USE ONLY WITH TOYOTA PRODUCTS. FREQUENCY 315/433MHZ. Australian Type Approved(Radio), where / where applicable. This product or its fitting must not be modified. Do not cover the product with any foreign material or the product's functionality. Do not use this product in any other ways which is not defined in the instructions.
Comment:	
Fitted By:	
Checked By:	

ISSUE: 2.B 12/12/11 Accessory Part No. PZQ29-00391 & PZQ29-00371 Page 27 of 27

FENDER LINER CUT INSTRUCTIONS

Narrow Body Fender Liner Cut

a) Confirm the correct bullbar and vehicle as per ID label **(1)**.

b) Mark cut line on RH fender liner with paint pen as per instructions **(2)**.

c) Unclip fender liner from wheel arch by removing the front five plastic clips and allow to sit on front wheel.

d) Cut the fender liner with multi tool, taking care not to cut or mark any vehicle component behind the fender liner.

e) Deburr cut edges with knife or deburring tool.

f) Re-attach cut fender liner to wheel arch using original plastic clips.

g) Repeat step for LH fender **(3)**.

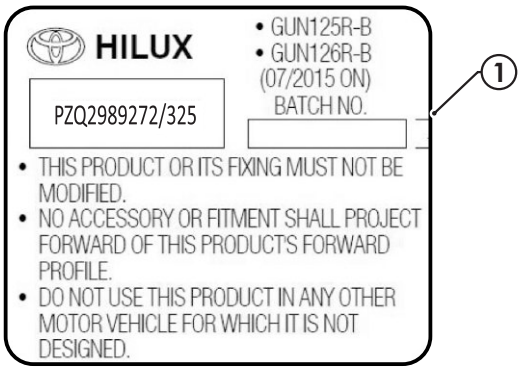

RH Fender Liner Cut

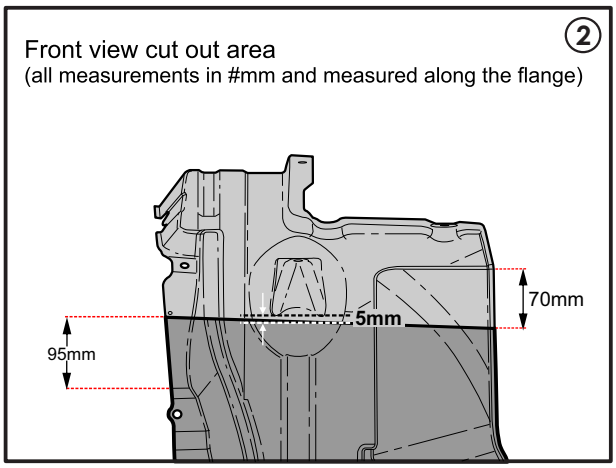

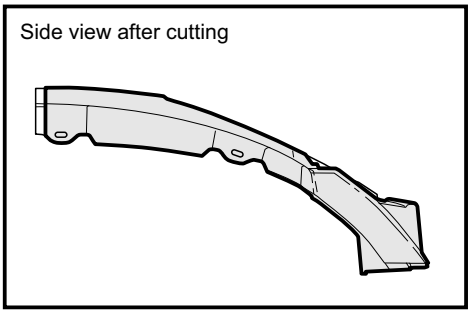

LH Fender Liner Cut

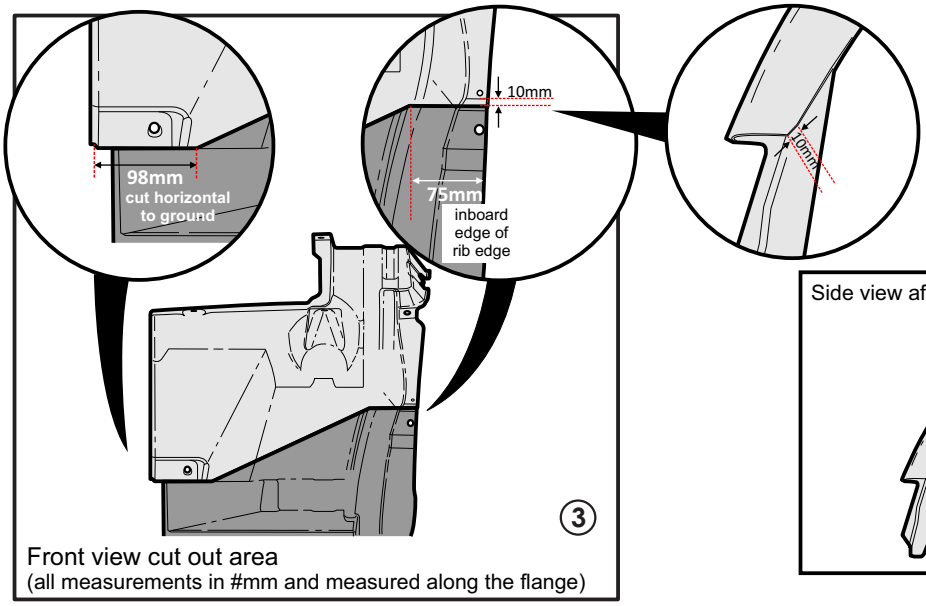

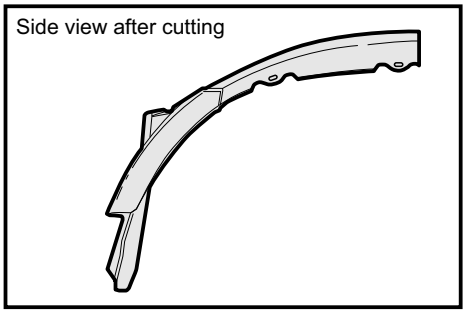

– Wide Body Fender Liner Cut

a) Confirm the correct bullbar and vehicle as per ID label **(1)**.

b) Mark cut line on RH fender liner with paint pen as per instructions **(2)**.

c) Unclip fender liner from wheel arch by removing the front five plastic clips and allow to sit on front wheel.

d) Cut the fender liner with multi tool, taking care not to cut or mark any vehicle component behind the fender liner.

e) Deburr cut edges with knife or deburring tool.

f) Re-attach cut fender liner to wheel arch using original plastic clips.

g) Repeat step for LH fender **(3)**.

– RH Fender Liner Cut

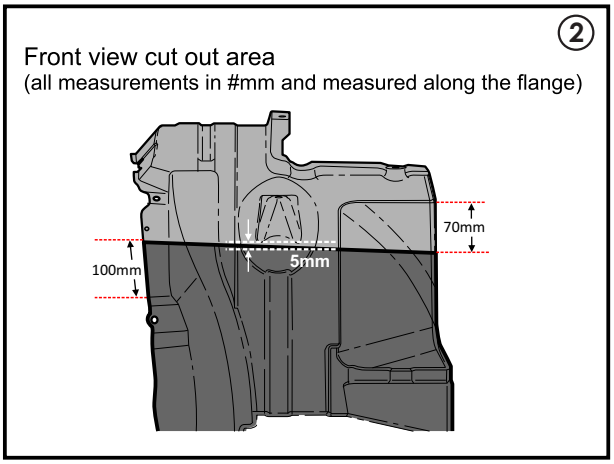

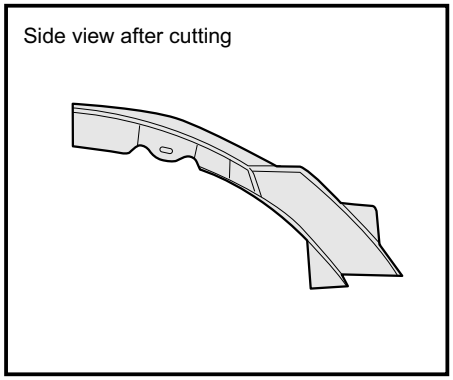

– LH Fender Liner Cut

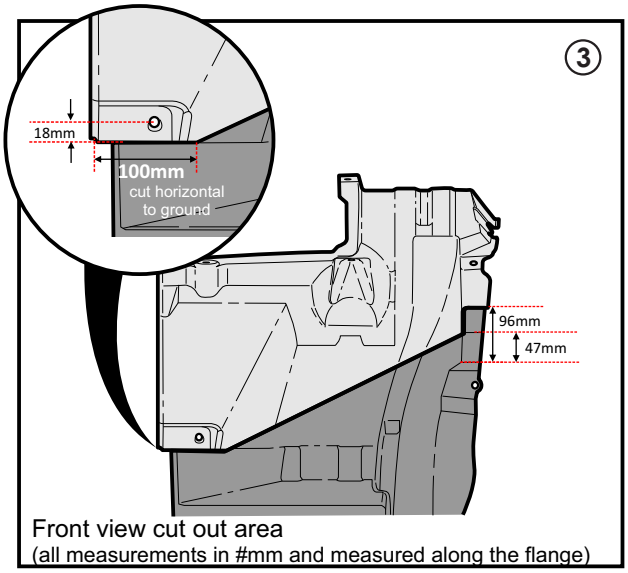

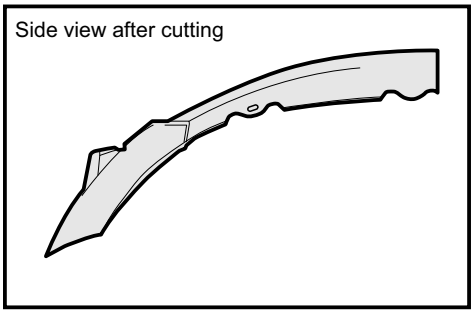

– Fortuner Fender Liner Cut

a) Confirm the correct bullbar and vehicle as per ID label **(1)**.

b) Mark cut line on RH fender liner with paint pen as per instructions **(2)**.

c) Unclip fender liner from wheel arch by removing the front five plastic clips and allow to sit on front wheel.

d) Cut the fender liner with multi tool, taking care not to cut or mark any vehicle component behind the fender liner.

e) Deburr cut edges with knife or deburring tool.

f) Re-attach cut fender liner to wheel arch using original plastic clips.

g) Repeat step for LH fender **(3)**.

– RH Fender Liner Cut

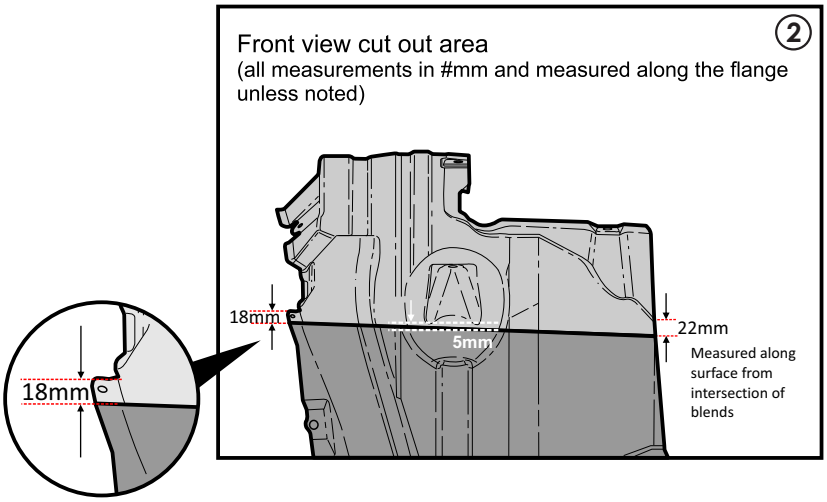

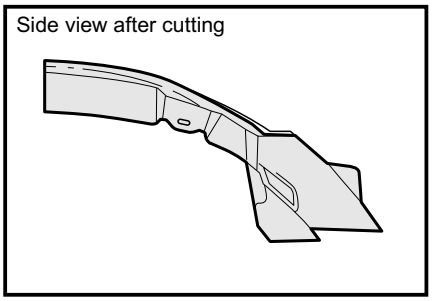

– LH Fender Liner Cut

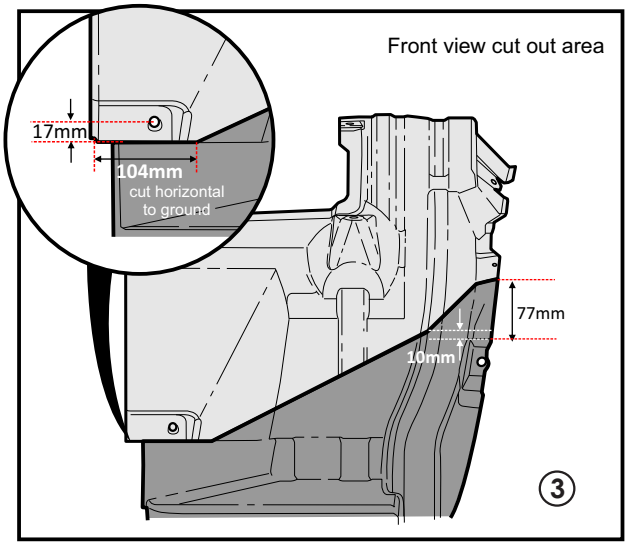

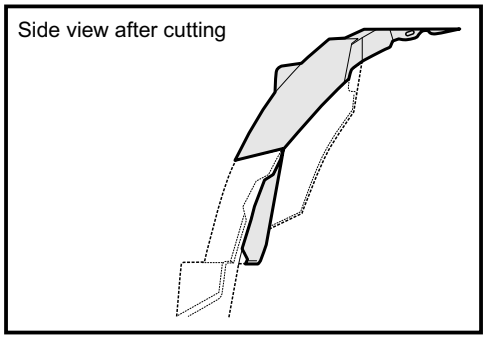

BUMPER CUT INSTRUCTIONS

Step 1

- Confirm correct bullbar and vehicle as per ID label **(1)**.
- Remove number plate **(2)** and keep for re-fitting to bullbar.
- Separate upper grille **(3)** and keep for re-fitting.
- If fitted, remove fog lamps **(4)** and keep for re-fitting to bullbar.
- Remove & discard lower grille **(5)**.

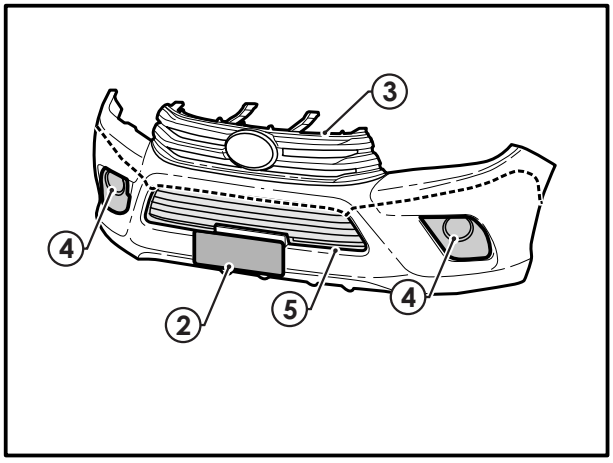

Step 2

Front Bumper Cut Narrow Body Templates.

- Confirm the template scale by checking the 50mm scale marker with a steel ruler.
- Cut the LH outboard template **(1)** and adhere to bumper as per instruction on cut template.
- Cut the LH inboard template **(2)** and adhere to bumper as per instruction on cut template.
- Join outboard **(1)** and inboard template **(2)** with masking tape to form one continuous line **(3)**.
- Mark the cut line on bumper with paint pen or permanent marker.
- **Repeat for RHS templates.**

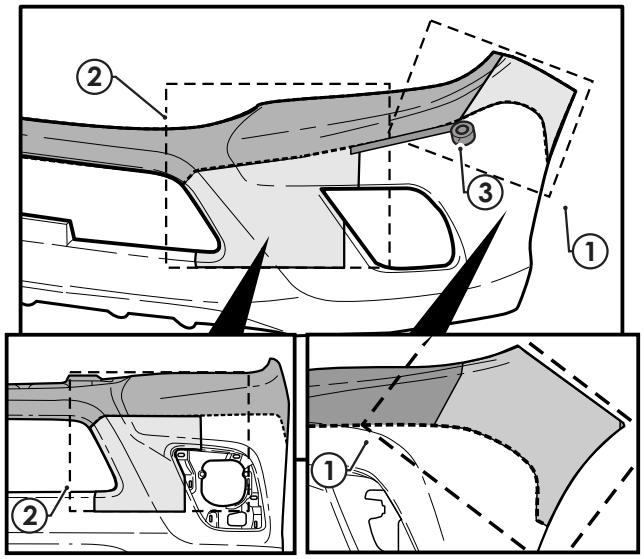

Step 3

Front Bumper cutting:

- With care, cut the bumper with multi tool.
- Deburr cut edges and wipe upper bumper **(1)** clean with a soft clean rag.
- Discard/dispose of lower section **(2)**.

Important

Take care when cutting. Ensure protective gloves are worn.

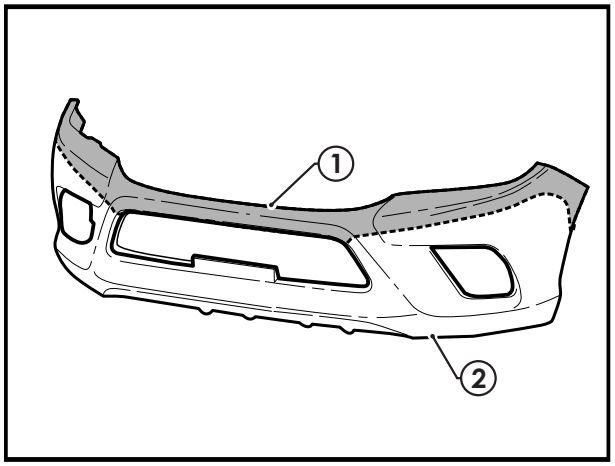

Step 1

- Confirm correct bullbar and vehicle as per ID label **(1)**.
- Remove number plate **(2)** and keep for re-fitting to bullbar.
- Separate upper grille **(3)** and keep for re-fitting.
- If fitted, remove fog lamps **(4)** and keep for re-fitting to bullbar.
- Remove & discard lower grille **(5)**.

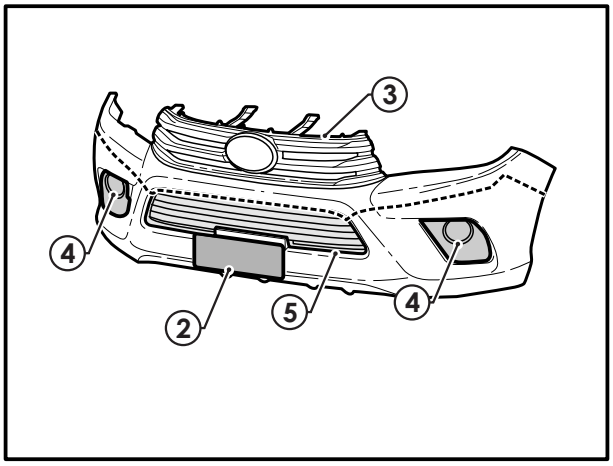

Step 2

Front Bumper Cut Wide Body Templates.

- Confirm template scale by checking 50mm scale marker with steel ruler.
- Cut LH outboard template **(1)** with scissors and adhere to bumper as per the instructions on cut template.
- Cut LH inboard template **(2)** with scissors and adhere to bumper as per the instructions on cut template.
- Check outboard template is parallel to bumper join (110mm) **(3)**.
- Join outboard and inboard template with masking tape to form one continuous line **(4)**.
- Mark complete cut line with marker pen.
- **Repeat for RHS templates.**

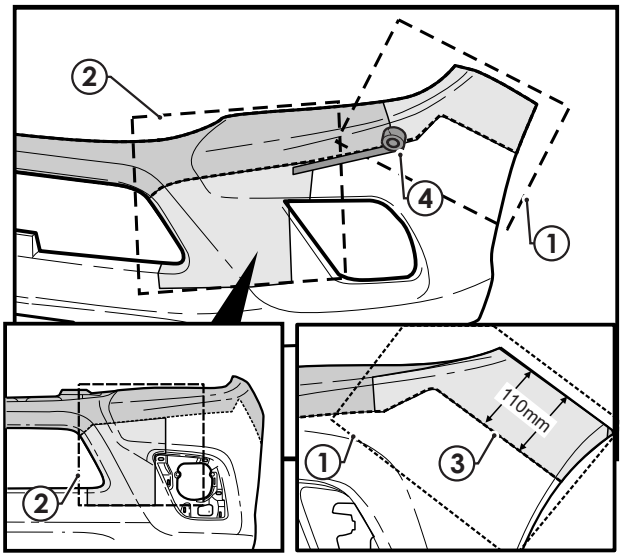

Step 3

Front Bumper cutting:

- Mark 22mm hole centre with pin hole or sharp point.
- Drill a 22mm hole with a hole saw or step drill.
- Re-mark bumper cut to join line to edge of hole if required.
- With care, cut bumper with multi tool.
- Deburr cut edges and wipe upper bumper **(1)** with clean soft rag.
- Discard/dispose of lower section **(2)**.

Important

Take care when cutting. Ensure protective gloves are worn.

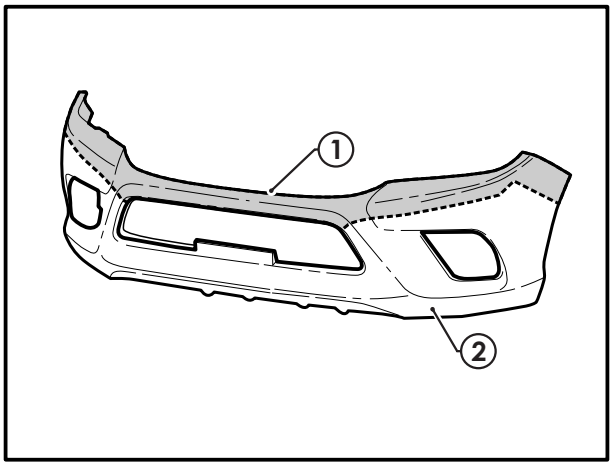

Step 1

- Confirm correct bullbar and vehicle as per ID label **(1)**.
- Remove number plate **(2)** and keep for re-fitting to bullbar.
- If fitted, remove fog lamps **(3)** and keep for re-fitting to bullbar.
- Remove & discard lower grille **(4)**.
- Remove OE fender flare **(5)**.

Important

Adhesive is used on the Fortuner fender flare. Take care when separating - refer to vehicle workshop manual.

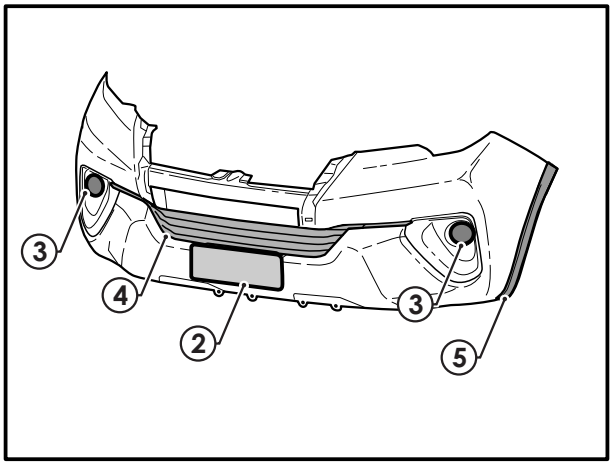

Step 2

Front Bumper Cut Fortuner Templates.

- Confirm template scale by checking the 50mm scale markers with a steel ruler.
- Cut LH outboard template **(1)** and adhere to bumper as per instructions on cut template. Align to bumper feature as shown.
- Cut LH inboard template **(2)** and adhere to bumper as per instructions on cut template. Align to bumper feature as shown.
- Check outboard template is parallel to bumper join (86mm) **(3)**.
- Join outboard and inboard template with masking tape to form one continuous line **(4)**.
- Mark complete cut line with marker pen.
- **Repeat for RHS templates.**

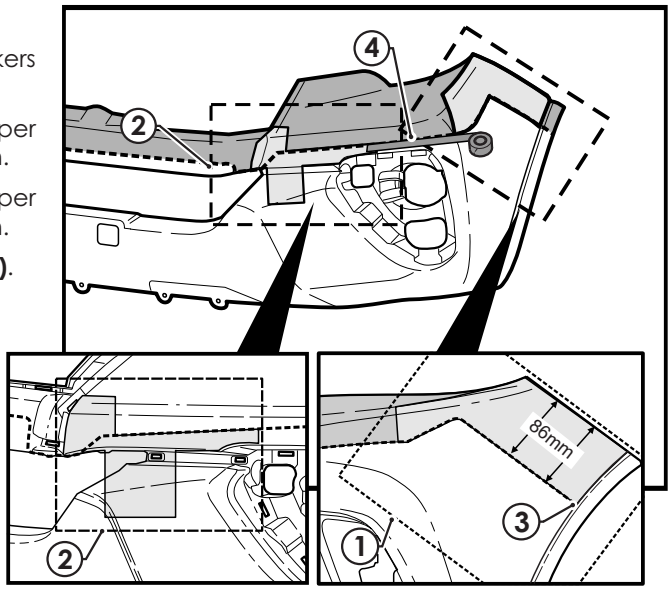

Step 3

Front Bumper cutting:

- Mark 22mm hole centre with pin hole or sharp point.
- Drill a 22mm hole with a hole saw or step drill.
- Re-mark bumper cut to join line to edge of hole if required.
- With care, cut bumper with multi tool.
- Deburr cut edges and wipe upper bumper **(1)** with clean soft rag.
- Discard/dispose of lower section **(2)**.

Important

Take care when cutting. Ensure protective gloves are worn.

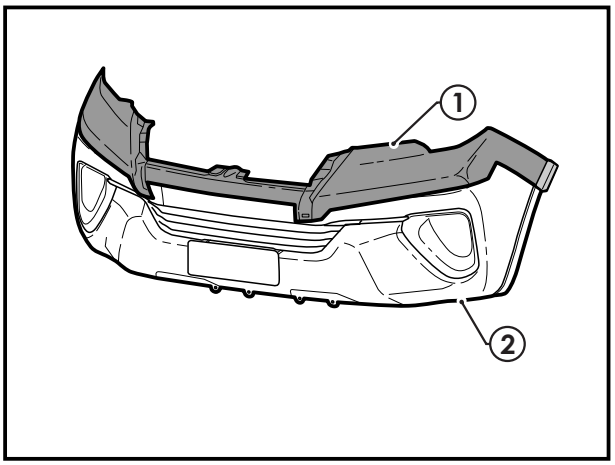

Step 4

- Using the cut bumper **(1)** as a guide, mark the LH side flare **(2)** and cut to length. Ensure cut is parallel to join **(3)**.
- Repeat for Right hand side **(6)**.
- Using side cutters, cut slot in bumper as shown **(4)**. Note, slot is required to allow pinch weld **(5)** to be routed through the bumper **(1)** and side flare **(2)**.

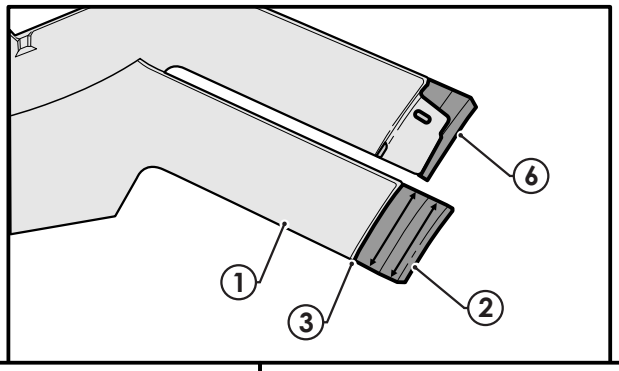

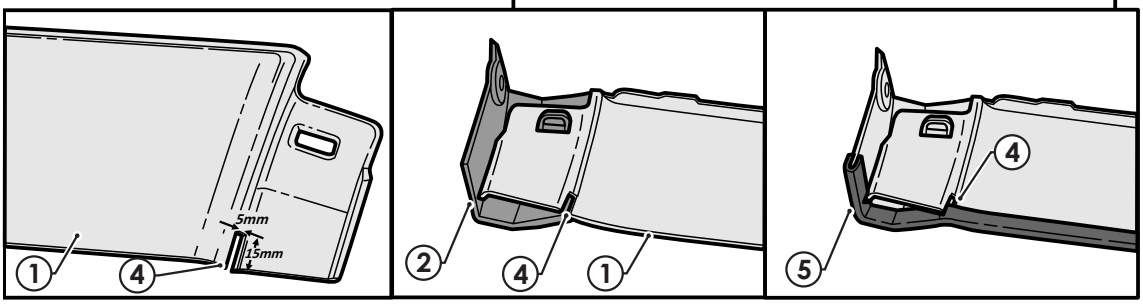

Ensure cut is located to allow for continuous fitment of pinch weld **(5)**.

Step 5

- Using dimensions shown, mark out centre region with marker pen. Use masking tape to help form straight lines.
- Drill Ø10mm hole **(1)** in two places.
- Cut bumper along marked lines.
- De-burr sharp edges.

Note: If fitting winch, additional cut is required.

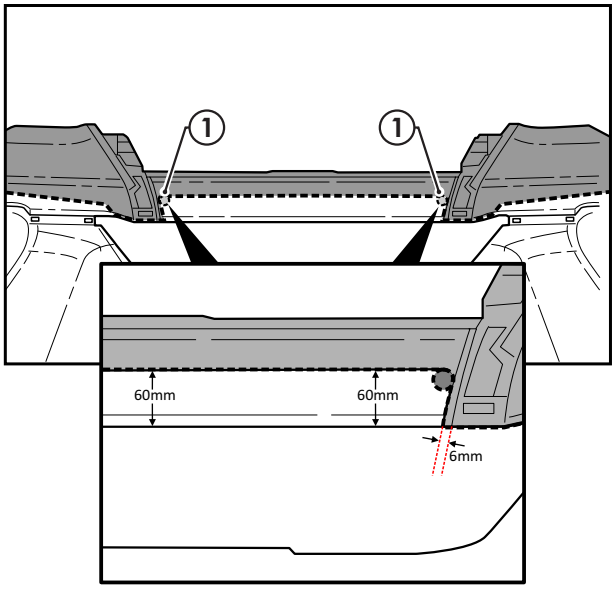

INSTALLATION CHECK LIST	
Dealer Name:	Dealer Code
Model:	Stock No:
Order Date:	Order No:
Required By:	Vin No:
Vehicle Damage Check:	

BULLBAR CHECKLIST	
1. Ensure correct spacing from bullbar to bumper	☐
2. Remove labels for bullbar spacing	☐
3. Fog Lamps Operational	☐
4. Front Position Lamps Operational	☐
5. Right/Left indicators (front and rear)	☐
6. All M6 Plastic Mounting Bolts tightened to 5Nm ⚠	☐
7. All other M6 Bolts tightened to 10Nm ⚠	☐
8. All M8 Bolts tightened to 25Nm ⚠	☐
9. All M10 Bolts tightened to 70Nm ⚠	☐
10. All M12 Bolts tightened to 77Nm ⚠	☐
11. Cable Tie all harnesses to vehicle at 200mm intervals.	
12. Batch No.	

Record applicable batch number here:

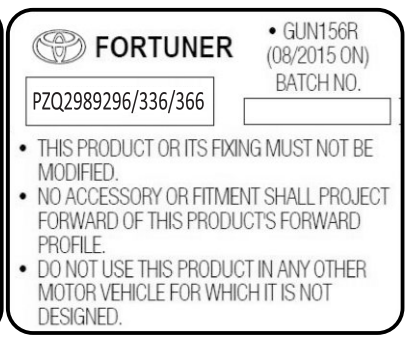

Comments:

Fitted By:

Checked By:

– Harness Diagram for Commercial Bullbar

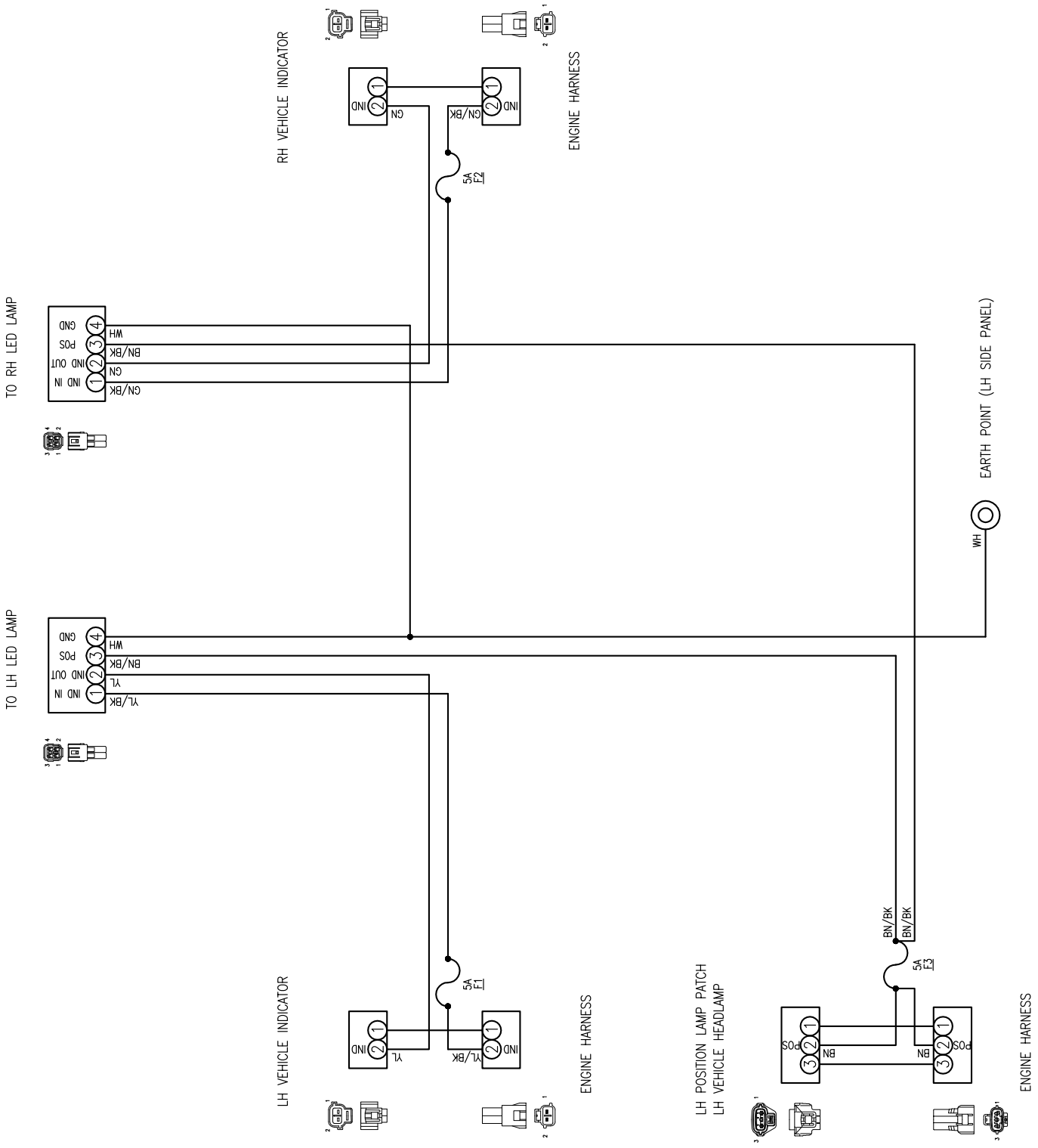
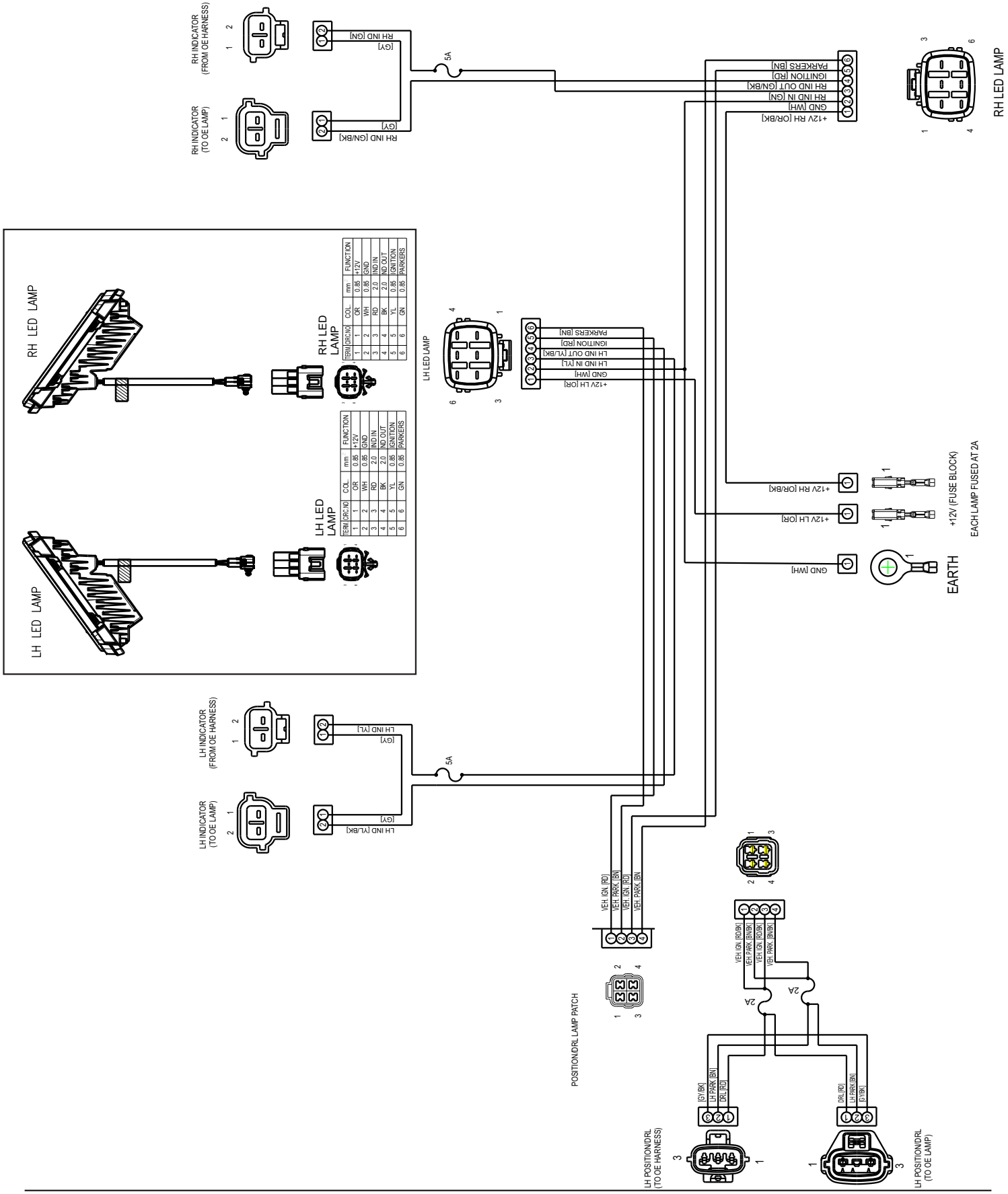
– Harness Diagram for Premium or Fortuner Bullbar