R-TTM-02 FLAT MOUNT RECOVERY TRACK CARRIER

PN	DESCRIPTION	QTY
1	R-TTM-01 BRACKETS	PAIR
2	M8X16MM BTN HEAD SCREWS	4
3	M8 FLAT WASHER	4
4	M8 LARGE FLAT WASHER	8
5	M8 CHANNEL NUT	4
6	M8X20MM HEX BOLT	4
7	RAPID RECOVERY TRACK PINS	4
8	M8 NYLOC NUT	4
9	SIDE BRACKETS	4

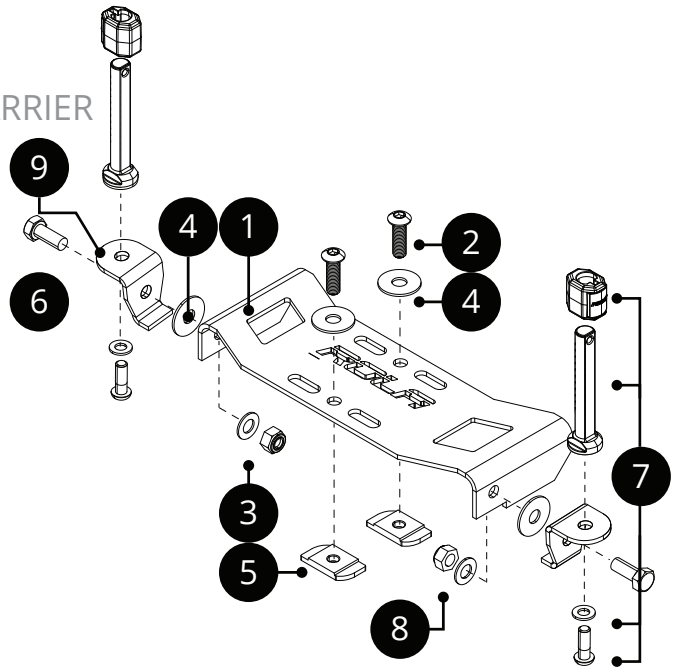

Please ensure all fasteners are tight before each trip. Use a minimum of two Rola Rapid Recovery Pins for two–four tracks (max 30 kg). For maximum strength, we recommend using all four pins (max 60 kg).

5 YEARS WARRANTY

For full warranty details refer to the website: www.rola.com.au

Tools included:
5mm allen tool

Tools included:
Torque wrench
Tape measure

1

Note: Ridged side of pins face away from user, when installed onto the vehicle. This will ensure track clicker button is easily accessible.

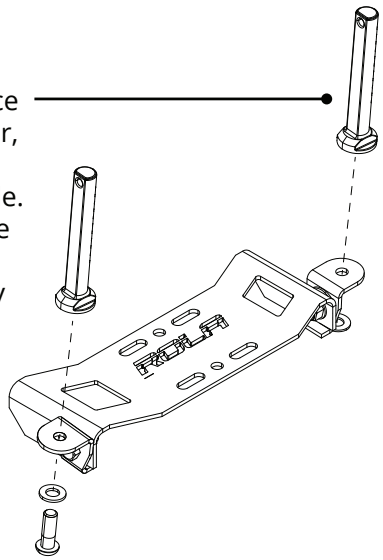

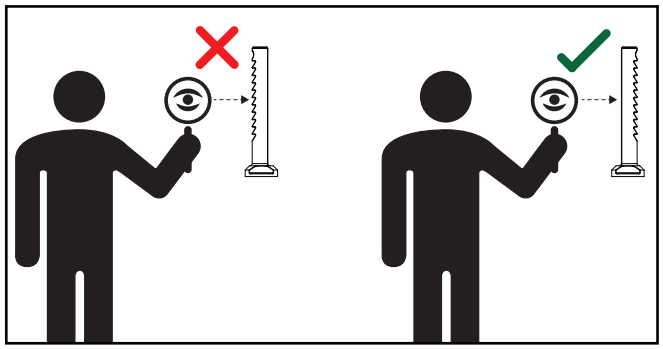

2

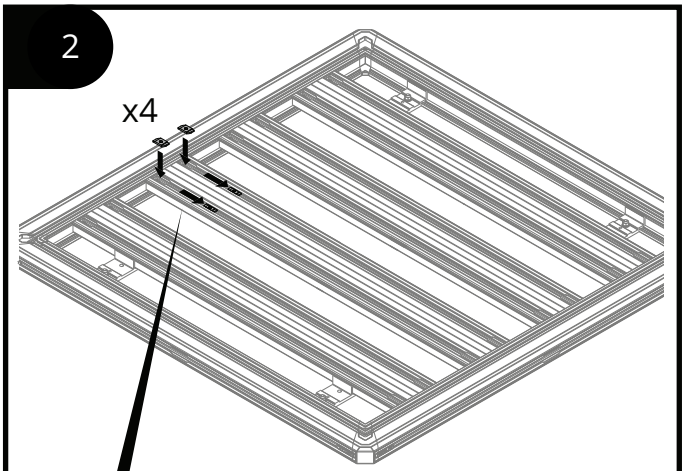

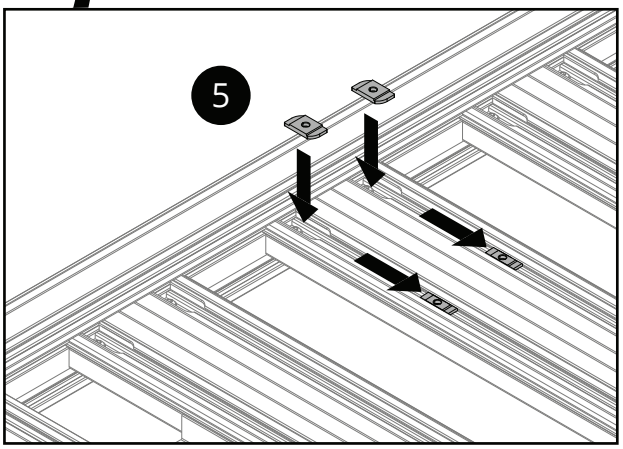

ROLA®

R-TTM-02 FLAT MOUNT RECOVERY TRACK CARRIER

3

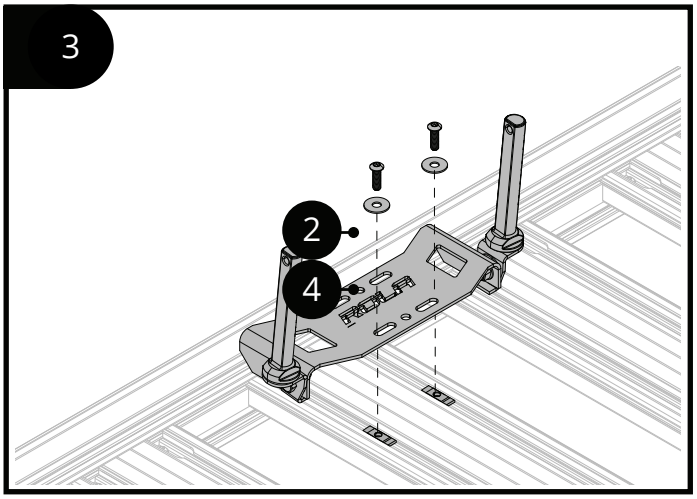

4

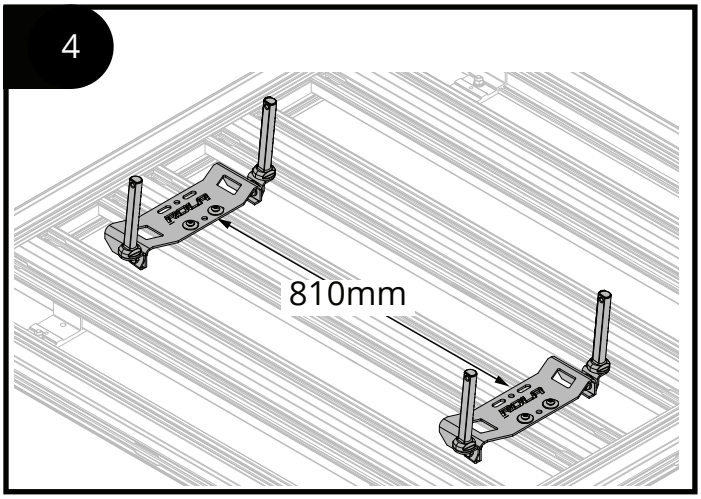

5

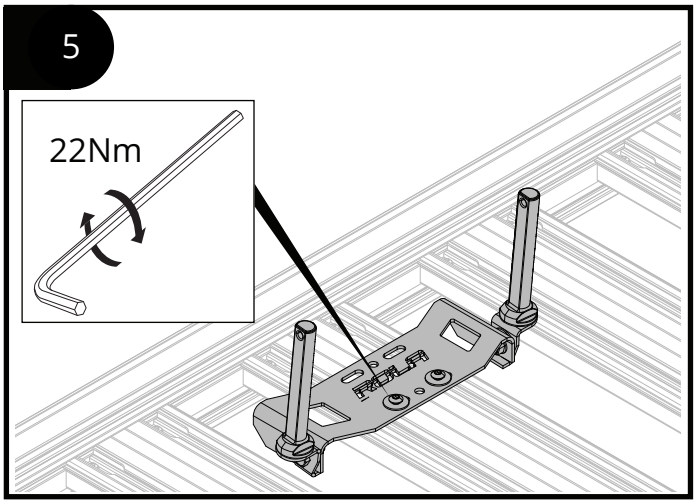

6

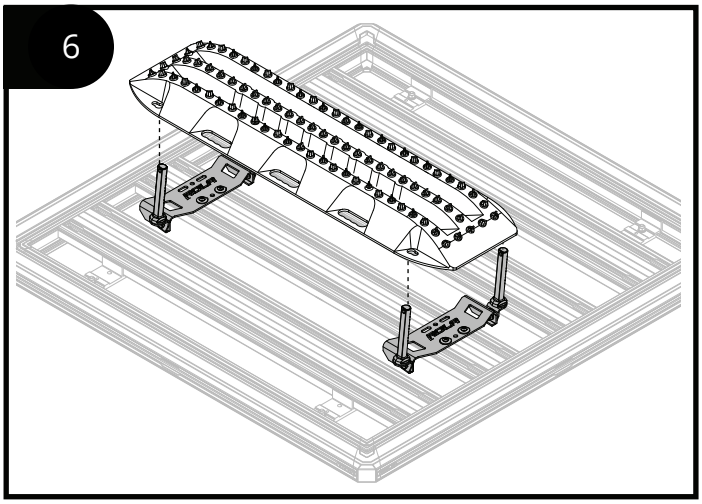

7

To secure tracks, push the Track Locker ™ onto the recovery track pin.

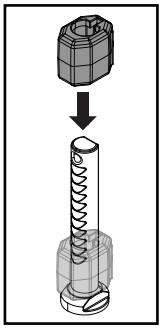

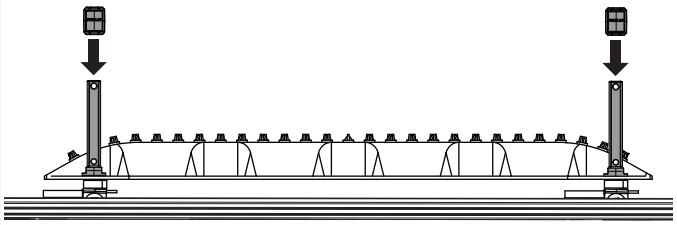

8

To remove the secured tracks. Push and hold the spring loaded button and pull vertically.

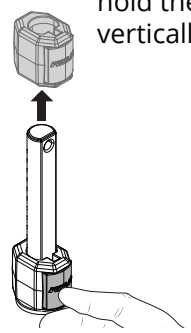

Note: Tracks can be locked, by using a padlock at the top of the pins.

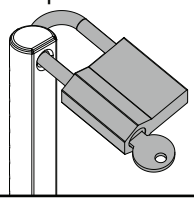

Note: Fold down when not in use.

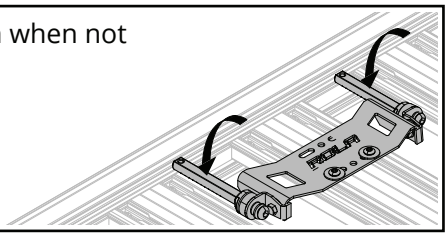

JUST ADD ADVENTURE ROLA®

R-TTM-02 FLAT MOUNT RECOVERY TRACK CARRIER

IMPORTANT - READ BEFORE USE
Please ensure the system is fitted in accordance with the fitting instructions.
It is important that you observe all outlined below.

WARRANTY INFORMATION

Rola warrants that, subject to exclusions and limitations below, the system will be free from defects in materials and workmanship for a period of 5 years commencing on the date of sale by the authorized Rola stockist to the original purchaser of the system.

If a defect appears in the system before the end of the warranty period and Rola finds that the defect is in materials or workmanship, Rola will, in its sole discretion, either:

1. Repair the system or the defective component of the system free of charge
2. Replace the system or the defective component of the system; or
3. Refund the purchase price of the system to the original purchaser.

Rola reserves the right to change the design, specifications or composition of the system without notice and without liability.
Rola reserves the right to replace defective products or components with products or components of similar quality, grade and composition, where an identical product or component is not available. Goods presented for repair may be replaced by refurbished goods of the same type rather than being repaired. Refurbished parts may be used to repair the goods. The 2 year warranty does not apply where:

1. The system is not installed in compliance with the fitting instructions provided
2. The system is not used as intended or designed
3. The system has been on-sold or assigned by the original purchaser
5. The system has been modified or repaired by someone other than Rola or an authorized Rola stockist
6. Rola cannot establish any fault after inspection of returned product
7. The system has been subject to abnormal conditions, including fire, water, humidity, pressure, stress or similar
8. The defect in the system has arisen due to abuse, misuse, neglect or accident
9. The defect in the system has arisen due to the unlawful or unusual operation of the vehicle to which it is fitted
10. The defect in the system has arisen due to the purchaser's failure to properly assemble, install, fit, maintain or use the system in accordance with the specifications and instructions provided by Rola.

For safety and use instructions, please refer to any General or Specific Fitting Instructions and Warning & Care Instructions enclosed within the system or on our website at www.rola.com.au.

This warranty does not extend to fair wear and tear. Warranty claims can be made by contacting Rola directly using the details below. A warranty claim must be accompanied by proof of purchase (such as receipt), details of the alleged defect and appropriate documentation (such as historical and maintenance records where appropriate). The customer must make the product available to Rola or its authorized repair agent for inspection and testing. If such inspection and testing finds no defect in the product, the customer must pay Rola usual costs of service work and testing. It is the purchaser's responsibility to arrange and pay to return the product or component to the place of purchase. The purchaser may seek reimbursement from Rola for the cost of such activities, providing Rola notifies the purchaser in writing that a warranty claim is justified. Any such claims made must be in writing via post or email.

The benefits of this warranty are in addition to any rights and remedies imposed by Australian State and Federal legislation that cannot be executed. Nothing in this warranty is to be interpreted as excluding, restricting or modifying any State or Federal legislation applicable to the supply of goods and services which cannot be so excluded, restricted or modified. Our goods come with guarantees that cannot be excluded under the Australian Consumer Law. You are entitled to a replacement or refund for a major failure and for compensation for any other reasonably foreseeable loss or damage. You are also entitled to have the goods repaired or replaced if the goods fail to be of acceptable quality and the failure does not amount to a major failure. Rola makes no express warranties or representations other than set out in this warranty.